Multi-Mode Microplate Reader

Synergy™ HT

Operator's Manual

BioTek®

Synergy™ HT

Multi-Mode Microplate Reader
Operator's Guide

November 2008
© 2008
Part Number 7091000
Revision I
BioTek® Instruments, Inc.

Notices

BioTek® Instruments, Inc.

Highland Park, P.O. Box 998

Winooski, Vermont 05404-0998 USA

All Rights Reserved

© 2008, BioTek® Instruments, Incorporated. No part of this publication may be reproduced, transcribed, or transmitted in any form, or by any means electronic or mechanical, including photocopying and recording, for any purpose other than the purchaser's use without written permission of BioTek Instruments, Inc.

Trademarks

BioTek® is a registered trademark, and Synergy™ HT, Gen5™, KC4™, and BioStack™ are trademarks of BioTek Instruments, Inc. All other trademarks are the property of their respective holders.

Restrictions and Liabilities

Information in this document is subject to change and does not represent a commitment by BioTek Instruments, Inc. Changes made to the information in this document will be incorporated in new editions of the publication. No responsibility is assumed by BioTek for the use or reliability of software or equipment that is not supplied by BioTek or its affiliated dealers.

Contents

Notices ii
Contact Information vii
Revision History viii
Document Conventions viii
Intended Use Statement xiii
Quality Control xiii
Warranty & Product Registration xiii
Warnings xiv
Hazards and Precautions xiv
Directives xvi
Electromagnetic Interference and Susceptibility xvii
User Safety xvii
Safety Symbols xviii

Chapter 1: Introduction 1
Synergy™ HT Multi-Mode Microplate Reader 2
Features 3
Package Contents 4
Optional Accessories 5
Product Support & Service 6
Technical Assistance Center (TAC) 6
Returning Instruments for Service/Repair 6
Contacting BioTek for Applications Support 6

Chapter 2: Installation 7
1: Unpack and Inspect the Reader 8
2: Remove the Shipping Panel 10
3: Remove the Microplate Carrier Shipping Screw 12
4: Install the Fluorescence Lamp Assembly 13
5: Select an Appropriate Location 14
6: Connect the Power Supply 15
7: Unpack and Inspect the Dispense Module 16
8: Install the Dispense Module 19
9: Connect the Host Computer 23
10: Install Software on the Host Computer 24
11: Turn on the Reader 24
12: Establish Communication 25
Using Gen5 26
Using KC4 26
13: Run a System Test 27
14: Test the Injector System 28
Register with BioTek 30

Operational/Performance Qualification 30
Repackaging and Shipping Instructions 31

Chapter 3: Getting Started 35
Key Components 36
Power Switch, Carrier Eject Button, Microplate Carrier 36
Lamp Assembly and Filter Wheel Access 37
Excitation and Emission Filter Wheels 38
Installing the Time-Resolved Fluorescence Cartridge 41
Configuring the System for Luminescence Measurements 42
The External Dispense Module 43
Gen5 Software 46
Viewing/Updating the Filter and Wavelengths Tables 46
Creating Protocols and Experiments 47
Controlling the Dispense Module 50
KC4 Software 52
Viewing/Updating the Filter and Wavelengths Tables 52
Creating Protocols 53
Reading Plates 55
Controlling the Dispense Module 56
Recommendations for Achieving Optimum Performance 59

Chapter 4: Instrument Qualification 61
Overview 62
IQ/OQ/PQ 62
Recommended Qualification Schedule 64
System Test 65
Description 65
Procedure 66
Absorbance Plate Test 70
Description 70
Test Plate Certificates 71
Setup: Gen5 72
Procedure: Gen5 73
Setup: KC4 74
Procedure: KC4 74
Results & Troubleshooting Tips 78
Absorbance Liquid Tests 80
Stock Solution Formulation 81
Liquid Test 1 82
Liquid Test 2 83
Liquid Test 3 86
Fluorescence Tests 89
Required Materials 90
Test Solutions 91

Procedure 92
Results Analysis 92
Troubleshooting 93
Pipette Map 94
Gen5 Protocol Reading Parameters 95
KC4 Protocol Reading Parameters 96
Fluorescence Tests Using Methylumbelliferone 98
Dispense Module Tests 102
Required Materials 103
Test Solution Recipes 104
Test Setup: Gen5 105
Test Setup: KC4 105
Test Procedure: Gen5 106
Test Procedure: KC4 108
Results Analysis 109
Creating Test Protocols Using Gen5 110
Creating Test Protocols Using KC4 115
Dispense Accuracy & Precision Test Worksheet 121

Chapter 5: Preventive Maintenance 123
Recommended Maintenance Schedule 124
Overview 124
Dispense Module 124
Schedule 126
Warnings & Precautions 126
Cleaning Exposed Surfaces 127
Inspecting/Cleaning Excitation and Emission Filters 128
Flushing/Purging the Fluid Path 129
Running a Dispense Protocol (Optional) 130
Emptying/Cleaning the Tip Priming Trough 132
Cleaning the Priming Plate 132
Cleaning the Internal Components 133
Required Materials 134
Removing the Reader’s Shroud 135
Removing the Internal Tubes and Injector Heads 137
Cleaning the Internal Tubes and Injector Heads 140
Cleaning the Optical Probes 141
Cleaning the Reader’s Internal Surface 149
Reassembling the Components 150
Performance Check 151

Appendix A: Decontamination 153
Purpose 154
Required Materials 155
Procedure for Models without Injectors 156

Routine Procedure for Models with Injectors 157
Clean Exposed Surfaces 157
Decontaminate the Fluid Lines..... 158
Rinse the Fluid Lines 159
Clean the Internal Tubing and Injector Heads 159
Clean the Tip Prime Trough and Priming Plate 160
Alternate Procedure for Models with Injectors 161

Appendix B: Computer Control 163
Appendix C: Error Codes.....165
Appendix D: Specifications.....207
Appendix E: Instrument Dimensions for Robotic Interface.....215

Contact Information

❖ For more detailed information on contacting BioTek for product support and service, turn to page 6.

BioTek® Instruments, Inc.
Highland Park, P.O. Box 998
Winooski, Vermont 05404-0998 USA

Customer Service and Sales

Internet:	www.biotek.com
Phone:	888-451-5171 (toll free in the U.S.) 802-655-4740 (outside the U.S.)
Fax:	802-655-7941
E-Mail:	customercare@biotek.com

Service/TAC

Phone:	800-242-4685 (toll free in the U.S.) 802-655-4740 (outside the U.S.)
Fax:	802-654-0638
E-Mail:	tac@biotek.com

European Coordination Center/ Authorized European Representative

BioTek® Instruments GmbH
Kocherwaldstrasse 34
D-74177 Bad Friedrichshall
Germany

Internet:	www.biotek.de
Phone:	+49 (0) 7136 9680
Fax:	+49 (0) 7136 968 111
E-Mail:	info@biotek.de

Revision History

Rev	Date	Changes
A	04/2002	First issue
B	08/2002	Added Time-Resolved Mode
C	08/2003	Added Dual Fluid Dispense Feature *Ch. 1, Introduction*: Updated specifications, accessories, and technical support. *Ch. 2, Instrument Description*: Updated component descriptions and added drawings. *Ch. 3, Installation*: Revised Dispenser Module setup instructions and KC4 launch procedure. Revised unpacking/repackaging instructions. Added new Chapter 4, "Getting Started With KC4." *Ch. 5, Performance Verification/Qualification Tests* (formerly Chapter 4): Revised test procedures. Reformatted *Appx A, Decontamination*, and *Appendix B, Computer Control*. Updated *Appx C, Error Codes*. Renamed *Appx D, Microplate Location Dimensions* to "Instrument Dimensions."
D	12/2003	*Preface*: Updated safety symbols and text (p. ix and x). Updated Intended Use Statement (p. xi). Revised Warranty (p. xii). *Chapter 1*: Modified Introduction (p. 1-3). Updated list of optional accessories (p. 1-4). Revised absorbance reading speed information (p. 1-5). Clarified fluorescence specifications (p. 1-8 and 1-9). Added specifications for injector model (p. 1-10). *Chapter 2*: Clarified description of external and internal components of the injector model and updated drawings. Moved procedure for replacing the lamp assembly to Ch. 6. *Chapter 5*: Added note regarding the availability of the Installation-Operational-Performance (IQ-OQ-PQ) package (PN 7090521) (p. 5-2). Updated liquid test procedures. Added new *Chapter 6, Maintenance and Troubleshooting*, which includes: Sample reproducible page from maintenance logbook; Procedures for maintenance and routine cleaning; Instructions for changing injector positions. Updated decontamination procedure (Appendix A). Modified *Appendix B, Computer Control*. Corrected *Appendix C, Error Codes*. Changed "Dispenser Module" to "Dispense Module" throughout.
E	02/2004	*Chapter 1, Introduction*: Removed reference to "NB" version (p. 1-3). Added specifications to reflect the use of an additional PMT type (R4220PHA) to Hardware Features (p. 1-3). Moved filter plug (7082073) from Optional Accessories list to Package Contents (p. 1-4). Added required specifications for microplates used in "Luminescence" mode

Rev	Date	Changes
(E)		(p. 1-5). Added "6- to 96-well plates" and "fluorescence and luminescence read modes" to Injector Model features (p. 1□10). Removed "option" from reference to Incubation specifications (p. 1-11). *Chapter 3, Installation*: Removed references to "NB" version from description of reader model options (Setting Communication Parameters in KC4, p. 3-12). *Chapter 5, Performance Verification/Qualification Tests*: Updated Figure 5-1, Sample System Test (p. 5-6 and 5-7). Updated *Appendix C, Error Codes*.
F	07/2004	*General*: Edited and reformatted text according to new template. Added photographs for clarification as needed. *Chapter 1*: Updated Optional Accessories list. *Chapter 2*: Updated text and graphics to describe/illustrate: Removal of the front injector. Redesign of the priming plate, to limit splatter. Improved system design to reduce need for periodic maintenance. Elimination of the right-front tip priming trough, and redesign of the left-rear trough. Improved bottle holder setup. *Chapter 3*: Updated diagram showing removal of Dispense Module from inner shipping box. Updated procedure for setting up Dispense Module on the Injector Model. *Chapter 4*: Removed instructions for setting injector position. *Chapter 6*: Added preventive maintenance procedure for periodic cleaning of the top/bottom fluorescence optical probes and the absorbance read channel optical path. *Appendix A*: Updated drawing of tip priming trough and priming plate.
G	8/2005	Updated Warranty information. Moved "Specifications" from Chapter 1 to Appendix D. Corrected operating temperature (18-40°C) and injector accuracy (±1 µl at 5-50 µl) to match published specifications. Removed Chapter 2, "Instrument Description" and distributed the information and photos among the remaining chapters. Reorganized the flow of the "Installation" chapter to better represent actual practice. Added test to verify the injector system setup. Changed the former "Getting Started with KC4" chapter to a broader "Getting Started" chapter that includes information on the key instrument components. Added new topic for configuring the system for luminescence reads. Renamed the "Performance Verification/Qualification Tests" chapter to "Instrument Qualification." Replaced former Dispense Precision & Accuracy Tests with new tests that use a single green dye solution and a single microplate. Restructured the "Preventive Maintenance" chapter to better represent actual practice. Added a recommended maintenance table for models without injectors. Added new photos to help with identification of the various components. Updated the "Error Codes" appendix with recent information. Additional minor corrections and improvements throughout.

Rev	Date	Changes
H	5/06	Redesigned the front cover. Removed unnecessary Warranty information; a Warranty card ships with every instrument. Added warning to shut down instrument and wait for the fluorescence lamp to cool down before replacing it. Added the PN for a replacement fluorescence lamp (7080500). For models with injectors: Simplified the installation and setup steps for the Dispense Module. Added recommendation to set a tip prime volume equal to the per-well dispense volume for volumes < 20 µl. Updated Absorbance Plate Test instructions related to Peak Wavelength, to support the modified 7-filter test plate. Simplified the process for creating Titration Dyes for the Fluorescence (SF) Sensitivity Test. Added information to the pass/fail criteria table for the (SF) Sensitivity Test. Clarified that for models without injectors, the reader's internal chamber and optical probes are not user-accessible for cleaning. Updated the "Error Codes" appendix with recent information. Additional minor cosmetic changes throughout. Added/modified instructions throughout to support Gen5™, including: Chapter 2, Installation - Added instructions for installing software, establishing communication with the reader, installing/testing dispense module components. Chapter 3, Getting Started - Added introductory information for new Gen5 users. Chapter 4, Instrument Qualification - Added instructions for performing the System Test, Absorbance Plate Test, and Dispense Accuracy & Precision Test. Chapter 5, Preventive Maintenance - Added instructions for creating the optional Dispense protocol in Gen5.
I	11/2008	*Throughout*: Changed product description from "Multi-Detection" to "Multi-Mode". Changed "Bio-Stack" to "BioStack." *Preface*: Corrected Service/TAC fax number. Updated the Intended Use section with respect to IVD labeling. Added cautions for Electromagnetic Environment and Compatibility. Updated Directives. Added 'Pinch hazard' to Hazards and Precautions. Added 'Consult Instructions for use' and 'IVD' to Safety Symbols. *Chapter 1, Introduction*: In the product introduction section, added note that Synergy HT basecode software version 2.24 or greater is required for use with Gen5™. Under 'Package Contents' added notice that part numbers are subject to change over time, and updated part numbers for the priming plate and tip priming trough. *Chapter 2, Installation*: Added section "Product Registration." *Chapter 4, Instrument Qualification*: Modified sample System Test Report and Absorbance Test Plate Results to reflect more current date and minimum basecode for Synergy HT to work with Gen5. *Absorbance Liquid Tests section*: Liquid Test 3, removed instructions for creating the rarely used Buffer Solution A. *Fluorescence Liquid Tests section*: Added option to use Sodium Borate instead of PBS with sodium fluorescein.

Rev	Date	Changes
(I)		Reconfigured the SF test solutions, dilutions, and pipette maps for efficiency and consistency with other BioTek products. Added option to use Methylumbelliferone to test the top optics. *Dispense Module Tests section*: Corrected the formula for Accuracy % Error. *Chapter 5, Preventive Maintenance*: Removed unnecessary "Clean Supply Bottle" section. Modified the Running a Dispense Protocol procedure to include running the experiment and inspecting the plate. Added a missing word to the Cleaning the Optical Probes section. *Appendix C, Error Codes*: Corrected the range of error codes under Home Sensor Initial Find Errors. Removed some text from the Status String Format section that was misleading.

Document Conventions

⚠	This icon calls attention to important **safety** notes.
Warning!	A **Warning** indicates the potential for bodily harm and tells you how to avoid the problem.
Caution	A **Caution** indicates potential damage to the instrument and tells you how to avoid the problem.
Note:	**Bold** text is primarily used for emphasis.
italic	Topics that apply only to specific Synergy HT models are preceded by a notice in italics, for example: *Applies only to Synergy™ HT models with injectors*.
ⓘ	This icon calls attention to **important information**.

Intended Use Statement

The Synergy™ HT is a single-channel absorbance, fluorescence, and luminescence microplate reader that uses a dual-optics design to perform measurements of samples in a microplate format. The performance characteristics of the data reduction software have not been established with any laboratory diagnostic assay. The user must evaluate this instrument and PC-based software in conjunction with the specific assay. This evaluation must include the confirmation that performance characteristics for the specific assay are met.

- This system is designed for use with PC-based software only. BioTek's software packages, Gen5™ and KC4™, provide the user with instrument control.
- The Synergy HT can operate with standard robotic systems, such as BioTek's BioStack™ Microplate Stacker.
- The intended use of this instrument is dependent on the instrument's labeling. If there is an IVD label, then the instrument may be used for clinical, research and development, or other non-clinical purposes. If there is no such label, then the instrument may **only** be used for research and development, or for other non-clinical purposes.

Quality Control

It is considered good laboratory practice to run laboratory samples according to instructions and specific recommendations included in the assay package insert for the test to be conducted. Failure to conduct Quality Control checks could result in erroneous test data.

Warranty & Product Registration

Please take a moment to review the **Warranty** information that shipped with your product. Please also **register** your product with BioTek to ensure that you receive important information and updates about the product(s) you have purchased.

You can register online through the Customer Care Center at www.biotek.com or by calling 888/451-5171 or 802/655-4740.

Warnings

Operate the instrument on a flat surface away from excessive humidity.

Bright sunlight or strong incandescent light can reduce the linear performance range of the instrument.

Measurement values may be affected by extraneous particles (such as dust) in the microplate wells. A clean work area is necessary to ensure accurate readings.

When operated in a safe environment according to the instructions in this document, there are no known hazards associated with the instrument. However, the operator should be aware of certain situations that could result in serious injury; these may vary depending on the instrument model. See **Hazards and Precautions**.

Hazards and Precautions

Hazards

Warning! Power Rating. The instrument's power supply or power cord must be connected to a power receptacle that provides voltage and current within the specified rating for the system. Use of an incompatible power receptacle may produce electrical shock and fire hazards.

Warning! Electrical Grounding. Never use a two-prong plug adapter to connect primary power to the external power supply. Use of a two-prong adapter disconnects the utility ground, creating a severe shock hazard. Always connect the power cord directly to a three-prong receptacle with a functional ground.

Warning! Internal Voltage. Always turn off the power switch and unplug the power supply before cleaning the outer surface of the instrument.

Warning! Liquids. Avoid spilling liquids on the instrument; fluid seepage into internal components creates a potential shock hazard. Wipe up all spills immediately. Do not operate the instrument if internal components have been exposed to fluid.

Warning! Potential Biohazards. Some assays or specimens may pose a biohazard. Adequate safety precautions should be taken as outlined in the assay's package insert. Always wear safety glasses and appropriate protective equipment, such as chemically resistant rubber gloves and apron.

Warning! Hot Surface. The fluorescence lamp assembly is hot when the instrument is turned on. Turn off the reader and allow the lamp to cool down before attempting to replace it.

Warning! Unspecified Use. Failure to operate this equipment according to the guidelines and safeguards specified in this manual could result in a hazardous condition.

Warning! Software Quality Control. The operator must follow the manufacturer's assay package insert when modifying software parameters and establishing reading methods. **Failure to conduct quality control checks could result in erroneous test data.**

Warning! Pinch Hazard. Some areas of the Dispense Module can present pinch hazards when the instrument is operating. These areas are marked with the symbol shown here. Keep hands/fingers clear of these areas when the instrument is operating.

Precautions

The following precautions are provided to help avoid damage to the instrument:

Caution: Service. The Synergy™ HT should be serviced by BioTek authorized service personnel. Only qualified technical personnel should perform troubleshooting and service procedures on internal components.

Caution: Environmental Conditions. Do not expose the system to temperature extremes. For proper operation, ambient temperatures should remain between 18°-40°C. Performance may be adversely affected if temperatures fluctuate above or below this range. Storage temperature limits are broader.

Caution: Sodium Hypochlorite. Do not expose any part of the instrument to the recommended diluted sodium hypochlorite solution (bleach) for more than 20 minutes. Prolonged contact may damage the instrument surfaces. Be certain to rinse and thoroughly wipe all surfaces.

Caution: Power Supply. Only use the power supply shipped with the instrument. Operate this power supply within the range of line voltages listed on it.

Caution: Shipping Panel and Carrier Shipping Screw. The shipping panel and carrier shipping screw must be removed before operating the reader. They must be reinstalled before repackaging the reader for shipment. See ***Chapter 2, Installation***.

Caution: Disposal. This instrument contains printed circuit boards and wiring with lead solder. Dispose of the instrument according to Directive 2002/96/EC, "on waste electrical and electronic equipment (WEEE)."

Caution: Electromagnetic Environment. Per IEC 61326-2-6 it is the user's responsibility to ensure that a compatible electromagnetic environment for this instrument is provided and maintained in order that the device will perform as intended.

Caution: Electromagnetic Compatibility. Do not use this device in close proximity to sources of strong electromagnetic radiation (e.g. unshielded intentional RF sources), as these may interfere with the proper operation.

Caution: Warranty. Failure to follow preventive maintenance protocols may **void the warranty.** See ***Chapter 5, Preventive Maintenance***.

CE	***Based on the testing described below and information contained herein, this instrument bears the CE mark***

Directive 2004/108/EC: Electromagnetic Compatibility

Emissions - Class A

The system has been type tested by an independent, accredited testing laboratory and found to meet the requirements of EN 61326-1 for Radiated Emissions and Line Conducted Emissions. Verification of compliance was conducted to the limits and methods of the following: CISPR 16-1, CISPR 16-2, and EN 55022.

This equipment has been designed and tested to CISPR 11 Class A. In a domestic environment it may cause radio interference, in which case, you may need to mitigate the interference.

Immunity

The system has been type tested by an independent, accredited testing laboratory and found to meet the requirements of EN 61326-1 for Immunity. Verification of compliance was conducted to the limits and methods of the following:

EN 61000-4-2 Electrostatic Discharge
EN 61000-4-3 Radiated EM Fields
EN 61000-4-4 Electrical Fast Transient/Burst
EN 61000-4-5 Surge Immunity
EN 61000-4-6 Conducted Disturbances
EN 61000-4-11 Voltage Dips, Short Interruptions and Variations

Directive 73/23/EEC Low Voltage (Safety)

The system has been type tested by an independent testing laboratory and was found to meet the requirements of EC Directive 73/23/EEC for Low Voltage. Verification of compliance was conducted to the limits and methods of the following:

EN 61010-1. "Safety requirement for electrical equipment for measurement, control and laboratory use. Part 1, General requirements."

Directive 2002/96/EC: Waste Electrical and Electronic Equipment

Disposal Notice. This instrument contains printed circuit boards and wiring with lead solder. Dispose of the instrument according to Directive 2002/96/EC, "on waste electrical and electronic equipment (WEEE)" or local ordinances.

Directive 98/79/EC: *In Vitro* Diagnostics (if labeled for this use)

- Product registration with competent authorities
- Traceability to the U.S. National Institute of Standards and Technology (NIST): Optical density measurementsare traceable to NIST.

Electromagnetic Interference and Susceptibility

USA FCC CLASS A

Warning: Changes or modifications to this unit not expressly approved by the manufacturer could void the user's authority to operate the equipment.

This equipment has been tested and found to comply with the limits for a Class A digital device, pursuant to Part 15 of the FCC Rules.

These limits are designed to provide reasonable protection against harmful interference when the equipment is operated in a commercial environment. Like all similar equipment, this equipment generates, uses, and can radiate radio frequency energy and, if not installed and used in accordance with the instruction manual, may cause harmful interference to radio communications. Operation of this equipment in a residential area is likely to cause interference, in which case the user will be required to correct the interference at his own expense.

Canadian Department of Communications Class A

This digital apparatus does not exceed Class A limits for radio emissions from digital apparatus set out in the Radio Interference Regulations of the Canadian Department of Communications.

Le present appareil numerique n'met pas du bruits radioelectriques depassant les limites applicables aux appareils numerique de la Class A prescrites dans le Reglement sur le brouillage radioelectrique edicte par le ministere des Communications du Canada.

User Safety

This device has been type tested by an independent laboratory and found to meet the requirements of the following:

- **Underwriters Laboratories UL 61010A-1, 1st edition, 2002**

  “Electrical Equipment for Laboratory Use; Part 1: General Requirements”

- **Canadian Standards Association CAN/CSA C22.2 No. 1010.1-1992**

  “Safety requirements for electrical equipment for measurement, control and laboratory use; part 1: general requirements”

Safety Symbols

Some of the following symbols may appear on the instrument.

Alternating current
Courant alternatif
Wechselstrom
Corriente alterna
Corrente alternata

Direct current
Courant continu
Gleichstrom
Corriente continua
Corrente continua

Both direct and alternating current
Courant continu et courant alternatif
Gleich - und Wechselstrom
Corriente continua y corriente alterna
Corrente continua e corrente alternata

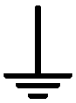

Earth ground terminal
Borne de terre
Erde (Betriebserde)
Borne de tierra
Terra (di funzionamento)

Protective conductor terminal
Borne de terre de protection
Schutzleiteranschluss
Borne de tierra de protección
Terra di protezione

On (Supply)
Marche (alimentation)
Ein (Verbindung mit dem Netz)
Conectado
Chiuso

Off (Supply)
Arrêt (alimentation)
Aus (Trennung vom Netz)
Desconectado
Aperto (sconnessione dalla rete di alimentazione)

Caution (refer to accompanying documents)
Attention (voir documents d'accompanement)
Achtung siehe Begleitpapiere
Atención (vease los documentos incluidos)
Attenzione, consultare la doc annessa

Warning, risk of electric shock
Attention, risque de choc électrique
Gefährliche elektrische schlag
Precaución, riesgo de sacudida eléctrica
Attenzione, rischio di scossa elettrica

Warning, risk of crushing or pinching
Attention, risque d'écrasement et pincement
Warnen, Gefahr des Zerquetschens und Klemmen
Precaución, riesgo del machacamiento y sejeción
Attenzione, rischio di schiacciare ed intrappolarsi

Warning, hot surface
Attention, surface chaude
Vorsicht, heiße Oberfläche
Precaución, superficie caliente
Attenzione, superficie calda

Separate collection for electrical and electronic equipment
Les équipements électriques et électroniques font l'objet d'une collecte sélective
Getrennte Sammlung von Elektro- und Elektronikgeräten
Recogida selectiva de aparatos eléctricos y electrónicos
Raccolta separata delle apparecchiature elettriche ed elettroniche

Consult instructions for use
Consulter la notice d'emploi
Gebrauchsanweisung beachten
Consultar las instrucciones de uso
Consultare le istruzioni per uso

***In vitro* diagnostic medical device**
Dispositif médical de diagnostic *in vitro*
Medizinisches *In-Vitro*-Diagnostikum
Dispositivo médico de diagnóstico *in vitro*
Dispositivo medico diagnostico *in vitro*

Chapter 1

Introduction

This chapter introduces the Synergy™ HT, describes its key features, and lists its package contents. Page 6 contains information on contacting BioTek® Instruments, Inc. for product support and service.

Synergy™ HT Multi-Mode Microplate Reader 2
Features 3
Package Contents 4
Optional Accessories 5
Product Support & Service 6
Technical Assistance Center (TAC) 6
Returning Instruments for Service/Repair 6
Contacting BioTek for Applications Support 6

Synergy™ HT Multi-Mode Microplate Reader

The Synergy HT is a single-channel absorbance, fluorescence, and luminescence microplate reader. It is computer-controlled using BioTek's **Gen5**™ or **KC4**™ PC software for all operations including data reduction and analysis. **Note:** Synergy HT basecode software version **2.24 or greater** is required for use with Gen5. The Synergy HT is robot accessible and compatible with BioTek's **BioStack**™ Microplate Stacker.

When making **fluorescence** determinations, the Synergy HT uses a tungsten quartz halogen lamp with interference filters for wavelength specificity in conjunction with a photomultiplier (PMT) tube detector. The Synergy HT has both top and bottom probes for fluorescence measurements. The top probe can be adjusted vertically for the correct reading height, via Gen5's/KC4's Top Probe Vertical Offset reading parameter (see ***Chapter 3, Getting Started***).

Luminescence is measured by the low-noise PMT detector through an empty filter position in the Emission filter wheel. A filter can also be left in place if light filtering is necessary.

Absorbance measurements are made by switching to a xenon flash lamp and a monochromator for wavelength selection. The use of a xenon flash lamp allows for both UV and visible light absorbance measurements. The monochromator provides wavelength selection from 200 to 999 nm in 1-nm increments.

The Synergy HT has a 4-Zone™ **temperature control** from 4°C over ambient to 50°C that ensures superior temperature uniformity necessary for kinetic assays. Internal plate shaking is also supported.

All Synergy HT models support the reading of 6-, 12-, 24-, 48-, 96-, and 384-well **microplates** with standard 128 x 86 mm geometry. Absorbance mode reads plates up to 0.8" (20.3 mm) in height; fluorescence mode reads plates up to 1.25" (31.75 mm). Polymerase Chain Reaction (PCR) tubes up to 1.25" (31.75 mm) are also readable with the use of existing adapter plates.

The Time-Resolved (TR) option allows **time-resolved fluorescence** measurements by using the xenon flash light source in conjunction with the PMT measurement detector. A special cartridge installed in the Excitation filter wheel location is required.

Models with **injectors** support dual-reagent dispensing to 6-, 12-, 24-, 48-, and 96-well microplates with standard 128 x 86 mm geometry. An **external dispense module** pumps fluid from the supply bottles to the two injectors located inside the instrument. Both injectors are positioned directly above the bottom probe, and fluid is injected into one well at a time.

Features

- Operated using BioTek's Gen5™ or KC4™ Data Analysis Software
- Dual-optics design, with separate fluorescence and absorbance channels
- 3 mm top and 5 mm bottom fluorescence probes (standard configuration)
- Optional 1.5 mm top/bottom, 3 mm bottom fluorescence probes (custom configurations)
- Optional Time-Resolved Fluorescence (TRF) capability ("T" models, e.g., SIAFR**T**)
- Fluorescence λ ranges:

  Standard low-noise PMT

  - Excitation: 300 to 650 nm (200 to 700 nm with "T" models)
  - Emission: 300 to 700 nm

  Optional red-extended PMT

  - Excitation: 300 to 650 nm (200 to 800 nm with "T" models)
  - Emission: 300 to 800 nm
- Absorbance λ range of 200 to 999 nm
- Absorbance OD range from 0.000 to 4.000 OD
- Low, Medium, High and Variable plate-shaking speeds with adjustable durations
- All models read 6-, 12-, 24-, 48-, 96- and 384-well microplates
- Injector models dispense to 6-, 12-, 24-, 48-, and 96-well microplates
- Operates from 100 to 240 V~ (± 10%) @ 50 to 60 Hz
- One serial COM port (9-pin female connector)
- One USB port
- 4-Zone™ incubation to 50ºC
- Optional dual-reagent dispensing capability

Package Contents

❖ Part numbers are subject to change over time. Please contact BioTek Customer Care with any questions.

- Microplate reader with Excitation and Emission filter wheels installed
- Operator's Manual (PN 7091000)
- Documents, including (but not limited to): Warranty Statement, Certificate of Compliance and Calibration, Unpacking/Packing Instructions
- Power supply (PN 76061, models with injectors or PN 76053, all other models)
- Power cord set (specific to installation environment):
  - PN 75010 (Schuko) (Europe)
  - PN 75011 (USA/International)
  - PN 75012 (UK)
  - PN 75013 (Australia/New Zealand)
- RS-232 serial cable (PN 75034)
- USB cable (PN 75108) with Virtual COM Driver Software (PN 7090204)
- Wrench (PN 48576)
- Fluorescence lamp assembly (PN 7080501) **Note:** The part number for a *replacement* lamp is 7080500.
- Filter "plugs" (2) (PN 7082073) (also referred to as "dummy filters")
- Plastic storage bag and Velcro strips
- Time-Resolved Fluorescence cartridge assembly (PN 7090523) ("T" models only)
- Models with injectors (SIAFRTD, SIAFRTD-CUSTOM), an external dispense module (PN 7090568), with the following accessories:
  - Outlet tubes (2, plus 2 spare) from dispense module to instrument (PN 7082120)
  - Inlet tubes (2) from supply bottles to syringe drives (PN 7082121)
  - 250 µL syringes (2) (PN 7083000)
  - Syringe thumbscrews (2) (PN 19511)
  - Priming plate (PN 7132158) and injector tip priming trough (PN 7132169)
  - Dispense module communication cable (PN 75107)
  - Dispense module front cover (PN 7082137)
  - Supply bottles (2, 30 mL, PN 7122609) and holder assemblies (2, PN 7090564)
  - Injector tip cleaning stylus (PN 2872304)

Optional Accessories

❖ Part numbers are subject to change over time. Please contact BioTek Customer Care with any questions.

- 7-filter Absorbance Test Plate (PN 7260522) for absorbance measurement testing
- Fluorescence Test Plate (PN 7092092) for fluorescence measurement testing
- Product Qualification (IQ-OQ-PQ) package (PN 7090521)
- PCR Tube Adapter Plates (PNs 6002072 and 6002076)
- Terasaki Adapter Plate (PN 7330531)
- BioCell™ Quartz Vessel (PN 7272051) and Adapter Plate (PN 7270512)
- Additional Fluorescence Filters (contact BioTek for part numbers and availability)
- Absorbance Liquid Test Solutions:
  - BioTek Wetting Agent Solution (PN 7773002)
  - BioTek QC Check Solution No. 1 (PN 7120779, 25 ml; or PN 7120782, 125 ml)
- BioTek Sodium Fluorescein Powder (PN 98155)
- (Models with injectors) Dispense Module Liquid Test Solutions:
  - BioTek Green Test Dye Solution (PN 7773003)
  - BioTek Blue Test Dye Solution (PN 7773001)
  - BioTek QC (Yellow) Solution (PN 7120782)

❖ The Synergy HT is compatible with BioTek's **BioStack Microplate Stacker**. The BioStack rapidly and systematically transfers microplates (up to 30 per "stack"), to and from the Synergy HT's microplate carrier. Contact BioTek or visit our website to learn more.

Product Support & Service

Technical Assistance Center (TAC)

If your instrument(s) or software fails to function properly, if you have questions about how to use or maintain our products, or if you need to send an instrument to BioTek for service or repair, please contact our Technical Assistance Center. BioTek's "TAC" is open from 8:30 AM to 5:30 PM (EST), Monday through Friday, excluding standard U.S. holidays. You can send a fax or an e-mail any time. You can also request technical assistance via our website: **www.biotek.com**.

Phone: (800) 242-4685 or (802) 655-4740 **Fax:** (802) 654-0638 **E-Mail:** tac@biotek.com

Please be prepared to provide the following information:

- Your name and company information, along with a daytime phone or fax number, and/or an e-mail address
- The product name, model, and serial number
- The software part number (available at **Help > About Gen5** or **Help > About KC4**) and basecode version (available via Gen5™ or KC4™ for the Synergy™ HT by selecting **System > Reader Control**)
- For troubleshooting assistance or instruments needing repair, the specific steps that produce your problem and any error codes displayed in Gen5/KC4 (see also ***Appendix C, Error Codes***)

Returning Instruments for Service/Repair

If you need to return an instrument to BioTek for service or repair, please contact the TAC for a Return Materials Authorization (RMA) number *before* shipping the instrument. Repackage the instrument properly (see ***Chapter 2, Installation***), write the RMA number on the shipping box, and ship to this address:

BioTek Instruments, Inc.
ATTN: RMA# xxxxx
100 Tigan Street
Highland Park
Winooski, Vermont 05404 USA

Contacting BioTek for Applications Support

BioTek's fully equipped Application Laboratory provides our on-staff scientists with the means to assist you with the integration of our instrumentation and software with your unique scientific applications. If you are having difficulty with optimizing fluorescence sensitivity or integrating a unique data reduction transformation, or you are just looking for a recommendation on an appropriate fluorophore, contact us.

Phone: (888) 451-5171 **E-Mail:** applications@biotek.com

Chapter 2

Installation

This chapter includes instructions for unpacking and setting up the Synergy™ HT and, if applicable, the external dispense module. Instructions are also included for repackaging the reader and dispense module for shipment.

Product Registration 8
1: Unpack and Inspect the Reader 9
2: Remove the Shipping Panel 11
3: Remove the Microplate Carrier Shipping Screw 13
4: Install the Fluorescence Lamp Assembly 14
5: Select an Appropriate Location 15
6: Connect the Power Supply 16
7: Unpack and Inspect the Dispense Module 17
8: Install the Dispense Module 20
9: Connect the Host Computer 24
10: Install the Software on the Host Computer 24
11: Turn on the Reader 25
12: Establish Communication 26
13: Run a System Test 28
14: Test the Injector System 29
Operational/Performance Qualification 31
Repackaging and Shipping Instructions 32

Product Registration

If you have not already done so, please register your product(s) with BioTek to ensure that you receive important information and updates about the product(s) you have purchased.

Register online through BioTek's ***Customer Resource Center*** at **www.biotek.com** or by contacting BioTek Customer Care.

Once registered, you can log into the Customer Resource Center and:

- Register your product warranty
- Manage your equipment inventory
- Access documentation on your products
- Download user manuals and software
- Check the status of your instrument's service
- Track your order

1: Unpack and Inspect the Reader

Important! Save all packaging materials. If you need to ship the reader to BioTek for repair or replacement, you must use the original materials. Using other forms of commercially available packaging, or failing to follow the repackaging instructions, may **void your warranty**.

During the unpacking process, inspect the packaging, reader, and accessories for shipping damage. If the reader is damaged, notify the carrier and your BioTek representative. Keep the shipping boxes and the packaging materials for the carrier's inspection. BioTek will arrange for repair or replacement of your reader immediately, before the shipping-related claim is settled.

Perform these steps to unpack and inspect the reader and accessories:

1. Open the outer shipping box. Remove the foam blocks to access the inner shipping box.

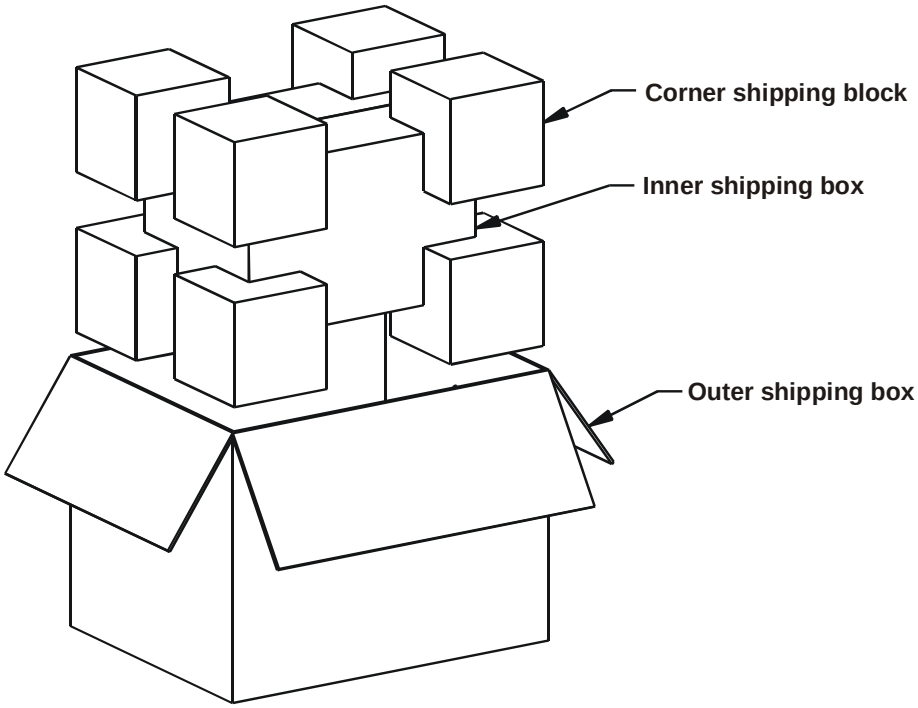

Figure 1-A: Unpacking the reader's outer shipping box

2. Carefully open the inner shipping box. Remove the accessories box and set it aside. Remove the vertical supports.
3. The Synergy™ HT is attached to a wooden shipping panel that has two handles for lifting. Locate and grasp the handles. Carefully lift the reader out of the box and place it on a level surface. Remove the protective plastic bag.
4. Place all packing material back into the shipping box for reuse if the reader needs to be shipped again.

❖ See ***Package Contents*** in Chapter 1 for assistance with identifying the contents of the accessories box.

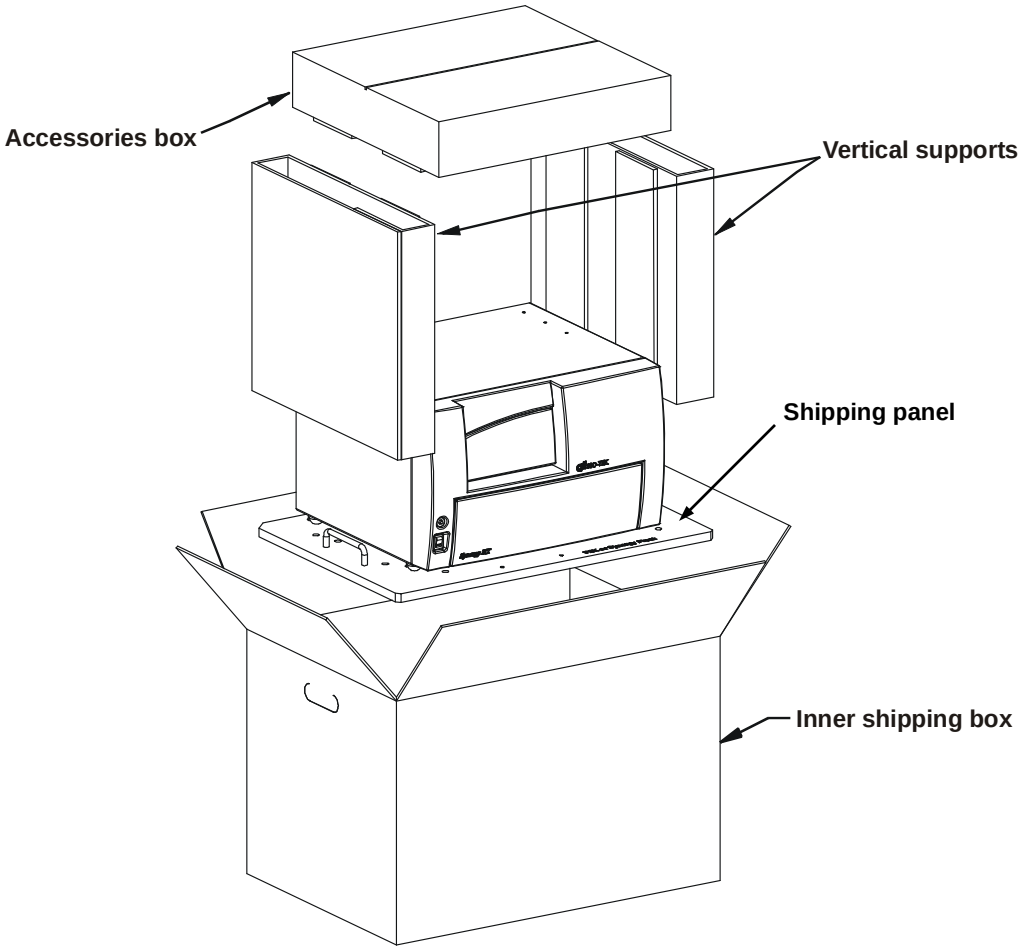

Figure 1-B: Unpacking the reader's inner shipping box

2: Remove the Shipping Panel

Perform these steps to remove the shipping panel from the bottom of the reader:

1. Carefully tip the reader onto its back.
2. Using a slotted screwdriver, remove the four screws and washers attaching the shipping panel to the bottom of the reader. See ***Figure 2*** on the next page.
3. Carefully set the reader upright.
4. Locate the supplied plastic tool storage pocket. Place the screws and washers inside the bag. Use the supplied Velcro strips to attach the pocket to the back of the reader for storage. Do not block any air vents. See ***Figure 3*** on the next page.
5. Place the panel back into the inner shipping box for storage.

Important: Reattach the shipping panel before repackaging the Synergy™ HT for shipment.

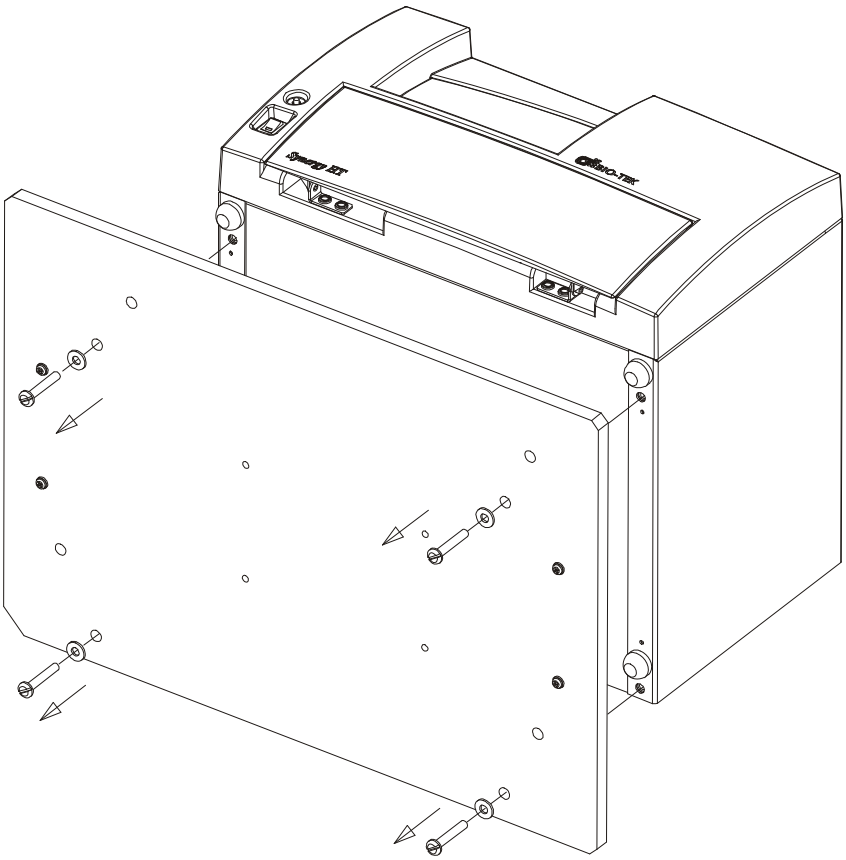

Figure 2: Removing the shipping panel

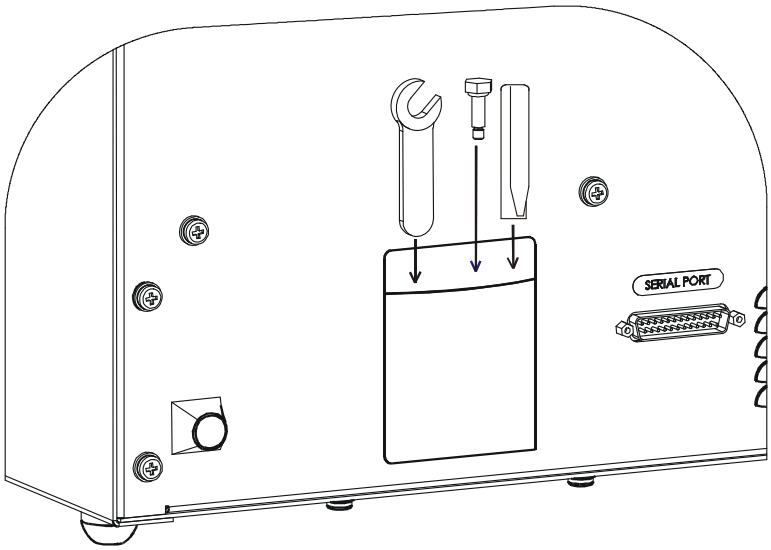

Figure 3: Storage pocket on the rear of the instrument
(wrench, carrier shipping screw, and warning tag shown)

3: Remove the Microplate Carrier Shipping Screw

Important: Remove the microplate carrier shipping screw before turning on the Synergy™ HT.

Perform these steps to remove the carrier shipping screw:

1. Pull down the microplate loading door on the front of the reader.
2. Using the supplied wrench, remove the carrier shipping screw with its o-ring and warning tag.
3. Place the wrench, screw, o-ring, and tag in the plastic tool storage bag that you attached to the back of the reader.

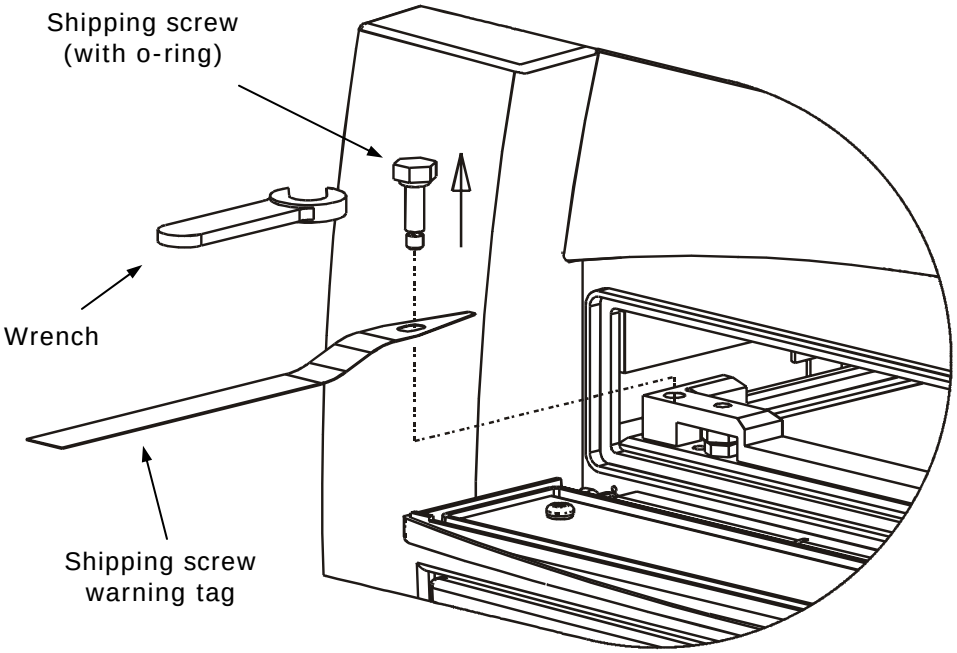

Figure 4: Removing the microplate carrier shipping screw

Important: Replace the microplate carrier shipping screw before repackaging the Synergy HT for shipment. Please contact BioTek if you have misplaced the screw (PN 7092071) and/or its o-ring (PN 49259).

4: Install the Fluorescence Lamp Assembly

	Important: Do not touch the glass lenses! Fingerprints on the condenser lens or heat absorber may negatively affect performance.
	Warning! The fluorescence lamp assembly is hot when the instrument is powered on. If the instrument is on, turn it off and allow the lamp to cool down before attempting to replace it.

Perform these steps to install the fluorescence lamp assembly:

1. Locate the lamp assembly in the accessories box. The lamp is attached to a metal bracket that also holds a condenser lens and a heat absorber. Two cables are attached to the back of the lamp.
2. Open the hinged door on the front of the reader by pressing on its lower left and right corners. The lamp compartment is on the far left.
3. Orient the lamp assembly as shown below. Slide the assembly all the way into the compartment.
4. Plug the lamp cables into the power source located to the right of the lamp. Either cable can be plugged into either socket.
5. Close the hinged door.

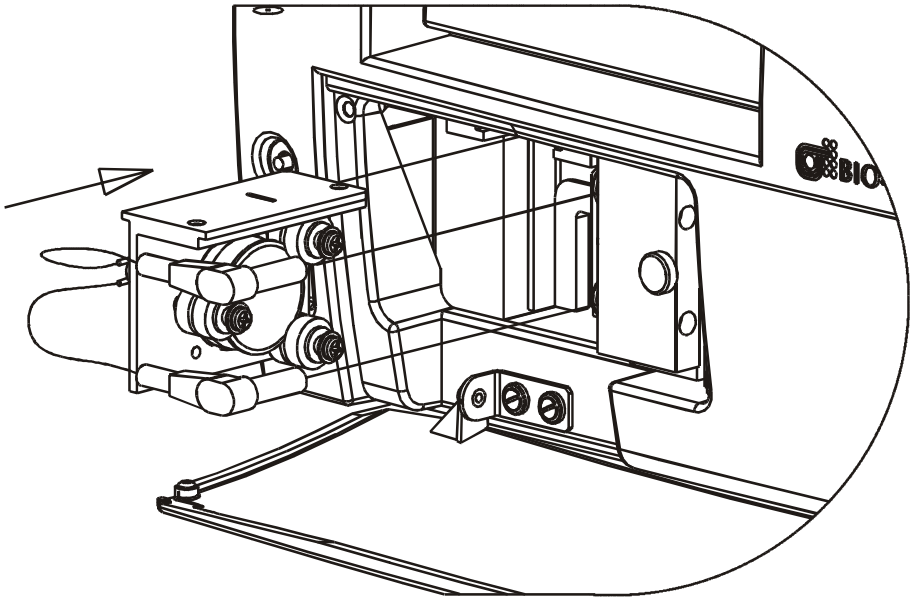

Figure 5: Installing the fluorescence lamp assembly (replacement lamp PN 7080500)

5: Select an Appropriate Location

Install the Synergy™ HT on a level surface in an area where ambient temperatures between 18º and 40ºC can be maintained.

The reader is sensitive to extreme environmental conditions. Avoid the following:

- **Excessive humidity:** Condensation directly on the sensitive electronic circuits can cause the reader to fail internal self-checks. The specified relative humidity range for this reader is from 10% to 85% (non-condensing).
- **Excessive ambient light:** Bright sunlight or strong incandescent light may affect the reader's optics and readings, reducing its linear performance range.
- **Dust:** Readings may be affected by extraneous particles (such as dust) in the microplate wells. A clean work area is necessary to ensure accurate readings.

❖ **Note:** If you will be installing BioTek's **BioStack™ Microplate Stacker** for operation with the Synergy HT, you may wish to seat the BioStack and the reader in their aligning plates at this time. Refer to the ***Installation*** chapter in the BioStack Operator's Manual for more information.

6: Connect the Power Supply

Warning! Power Rating. The power supply must be connected to a power receptacle that provides voltage and current within the specified rating for the system. Use of an incompatible power receptacle may produce electrical shock and fire hazards.

Warning! Electrical Grounding. Never use a two-prong plug adapter to connect primary power to the power supply. Use of a two-prong adapter disconnects the utility ground, creating a severe shock hazard. Always connect the power cord directly to an appropriate receptacle with a functional ground.

Perform these steps to connect the power supply:

1. Connect the power cord to the external power supply.
2. Locate the power inlet on the rear of the reader.
3. Plug the rounded end of the power supply's line cord into the power inlet.
4. Plug the power cord into an appropriate power receptacle.

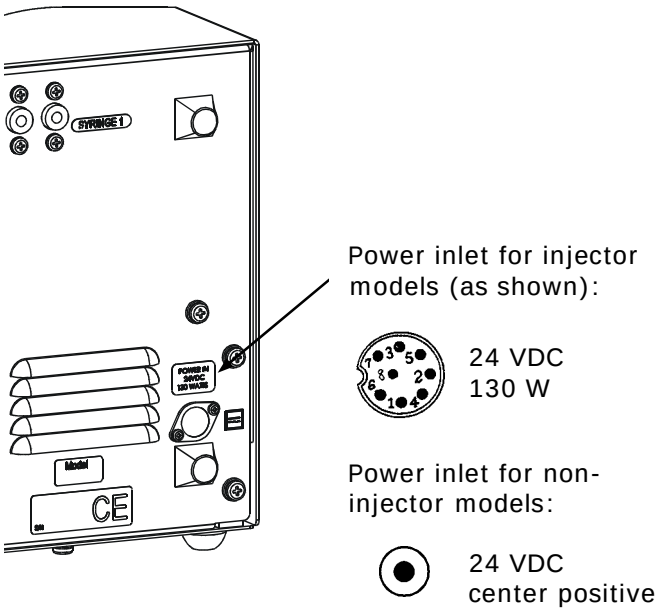

Figure 6: Power inlet on the rear of the instrument

7: Unpack and Inspect the Dispense Module

This section applies to Synergy™ HT models with injectors only.

Important! Save all packaging materials. If you need to ship the dispense module to BioTek for repair or replacement, you must use the original materials. Using other forms of commercially available packaging, or failing to follow the repackaging instructions, may **void your warranty**.

During the unpacking process, inspect the packaging, module, and accessories for shipping damage. If the reader is damaged, notify the carrier and your BioTek representative. Keep the shipping boxes and the packaging materials for the carrier's inspection. BioTek will arrange for repair or replacement of your reader immediately, before the shipping-related claim is settled.

Perform these steps to unpack and inspect the dispense module and accessories:

1. Open the outer shipping box. Remove the foam cap, inner shipping box, and accessories box.

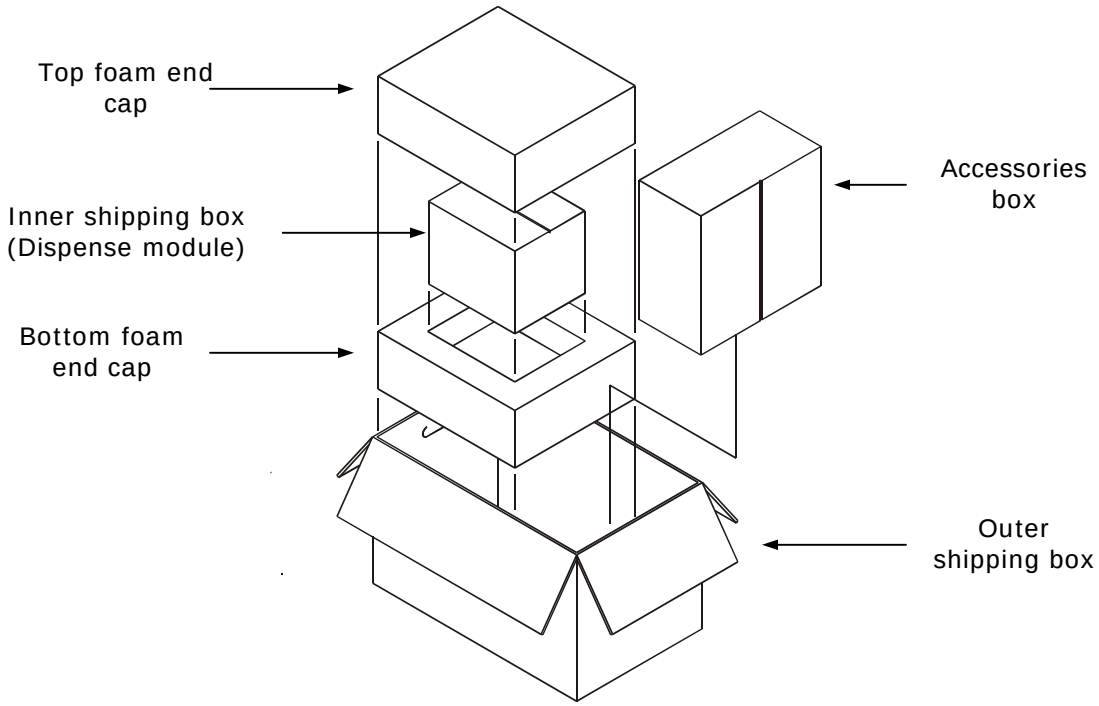

Figure 7: Unpacking the dispense module's outer shipping box

2. **Using no sharp tools,** open the box containing the dispense module. Remove the two reagent bottle holders and the cardboard shipping insert. Lift out the module and place it on a level surface.

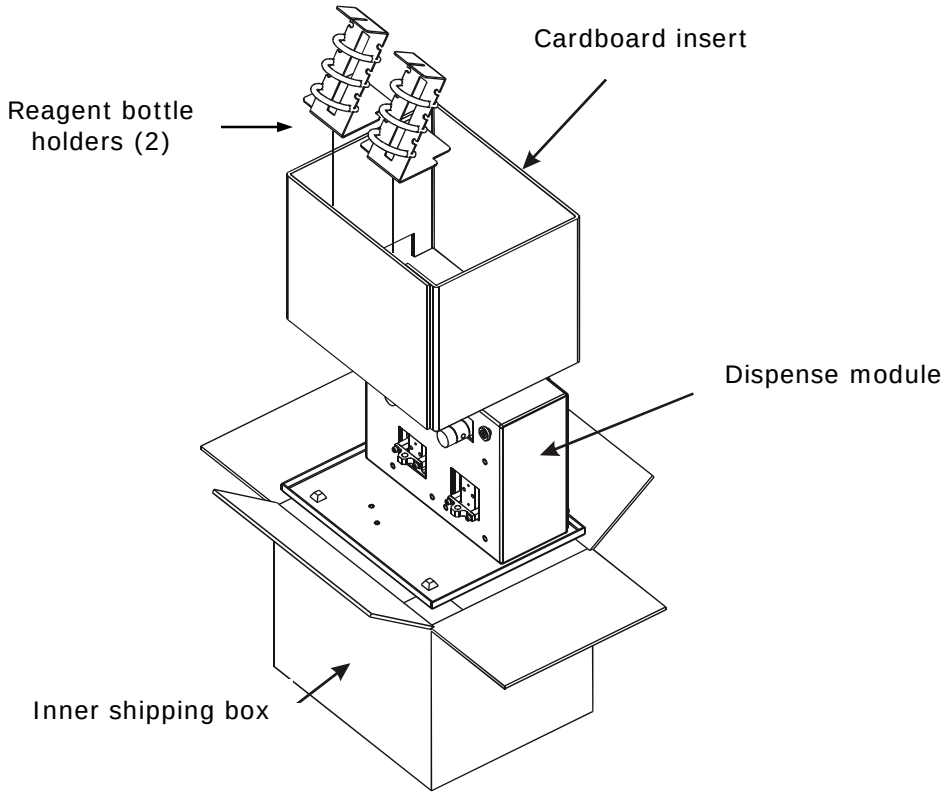

Figure 8: Unpacking the dispense module's inner shipping box

3. Open the accessories box. Remove and identify its contents (see ***Figure 9*** on the next page):

   2 inlet tubes, packaged in plastic cylinders

   4 outlet tubes, packaged in plastic bags (PN 7082120)

   2 syringes, packaged in boxes

   1 priming plate

   2 reagent bottles

   1 injector tip priming trough (small, plastic cup)

   1 plastic tool storage bag with Velcro strips

   2 metal thumbscrews

   1 stylus (wire) packaged in a small plastic cylinder

   1 dispense module cover

   1 dispense module cable

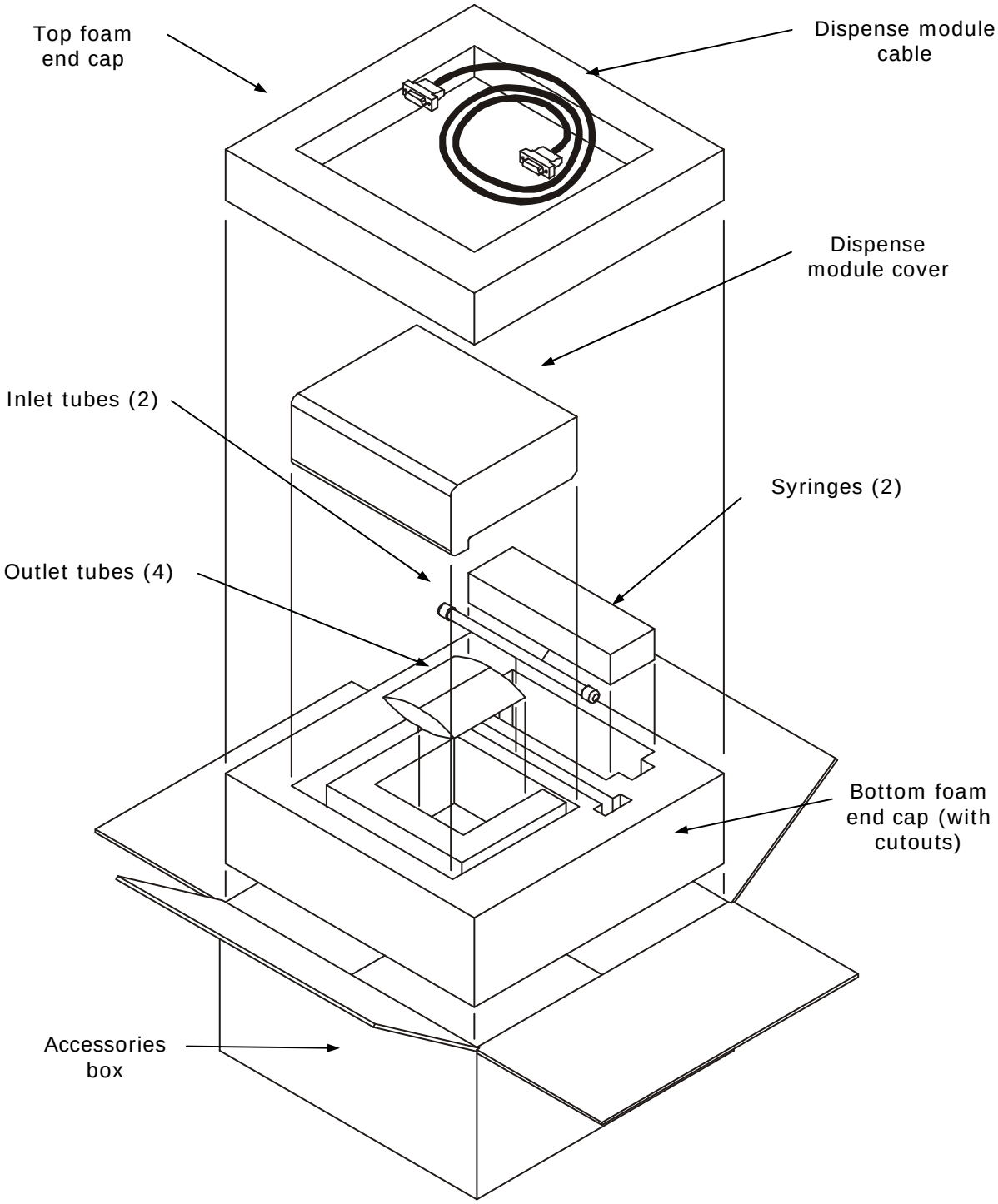

Figure 9: Unpacking the dispense module's accessories

8: Install the Dispense Module

This section applies to Synergy™ HT models with injectors only.

❖ Refer to the figures on the next two pages for guidance while performing these steps.

Perform these steps to install the dispense module:

1. Place the dispense module to the **left side** or on **top** of the reader. See the photos on the next page.
2. On the rear panel of the Synergy HT, identify the **SYRINGE 1** and **SYRINGE 2** tubing ports. Remove the nylon screws from both ports.
3. Open two of the plastic bags containing the **outlet tubes** (labeled as PN 7082120). Remove the clear plastic fitting covers from the tubes. Put the other two bags in a safe place; they are spares.
4. Place the nylon screws and the plastic fitting covers in the plastic tool **storage bag**. Use the supplied Velcro strips to attach the bag to the rear panel of the dispense module.
5. Remove the two **inlet tubes** from their protective plastic canisters.
6. Identify the two circular **syringe valves** on the dispense module. Each is labeled with a left-pointing arrow. See ***Figure 12*** on the next page.

❖ When installing the inlet and outlet tubes, do not use any tools. Finger-tighten only!

7. Screw the fitting of one **inlet** tube into the **right** side of the **Syringe 1** valve.
8. Screw one end of one **outlet** tube into the **left** side of the **Syringe 1** valve.
9. Screw the other end of the outlet tube into the **SYRINGE 1 port** on the rear of the Synergy HT.
10. Repeat steps 7 through 9 to attach the inlet and outlet tubing for **Syringe 2**.
11. Seat the outlet tubes in the **clip** to the left of the Syringe 2 valve.

Continued on page 21.

Figures 10 and 11: Possible locations for the dispense module, to the left or on top of the instrument.

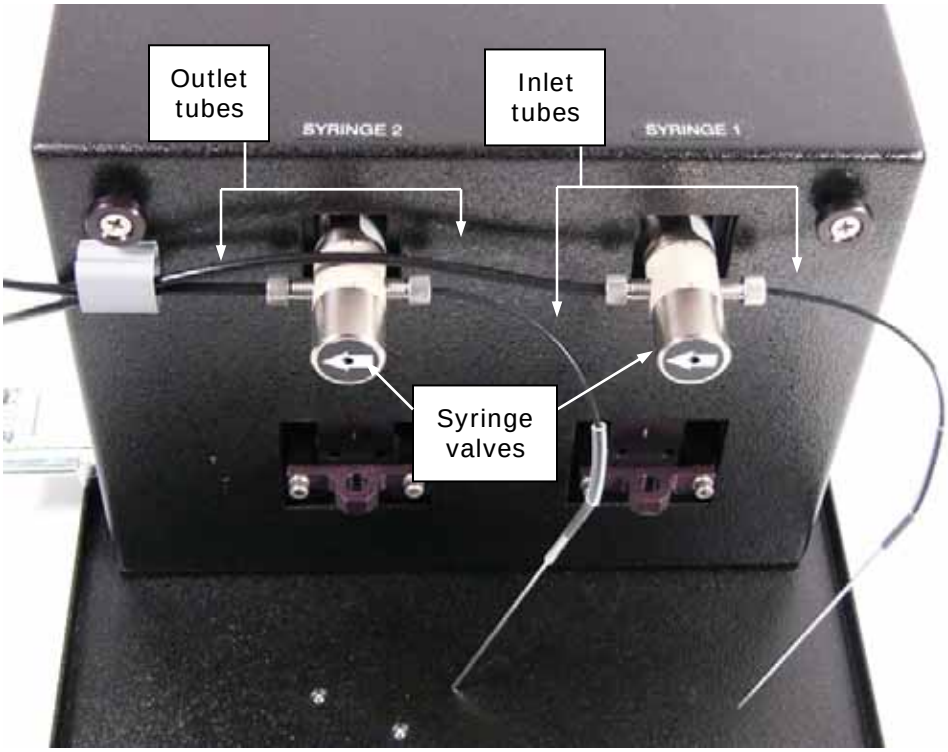

Figure 12: Initial setup of the dispense module

12. Remove the two **syringes** from their protective boxes. They are identical and interchangeable. Each syringe should already be assembled in one piece, but if for some reason there are two separate pieces, assemble them now: insert the white tip of the syringe plunger into the barrel of the syringe and gently push it all the way into the barrel.

13. Install both syringes:

    - Hold the syringe vertically with the threaded end at the top and the knurled steel end at the bottom.
    - Screw the threaded end of the syringe into the bottom of the **syringe valve**. Finger-tighten only.
    - Carefully pull down the knurled steel end of the syringe until it is resting inside the hole in the **bracket**.
    - Pass a metal **thumbscrew** up through this hole and thread it into the bottom of the syringe. Hold the syringe from rotating while tightening the thumbscrew. Finger-tighten only.

    The installed syringes should resemble the following:

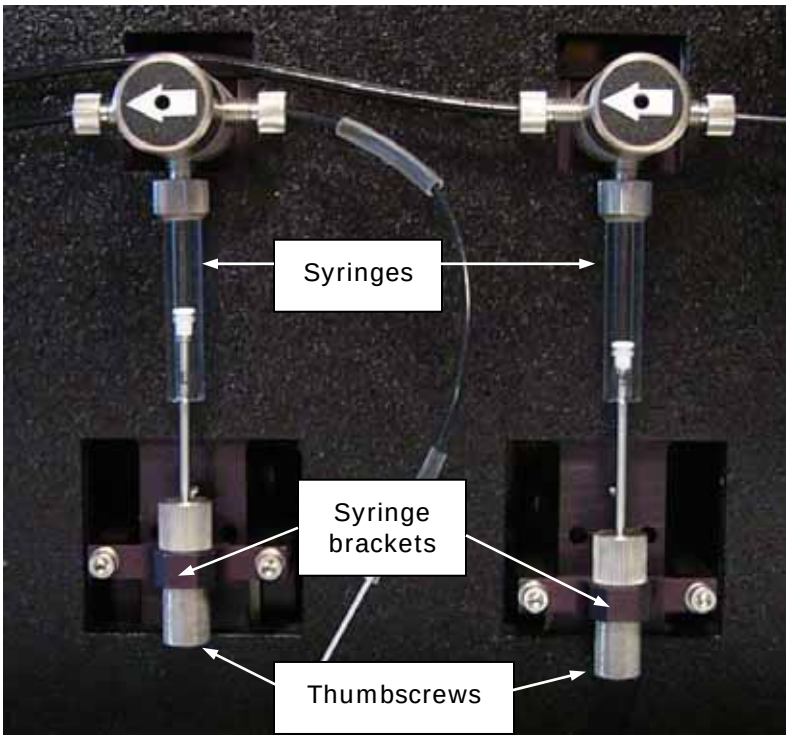

Figure 13: The dispense module with the syringes installed

Continued on the next page.

14. Locate the dispense module **cable**. Plug one end into the port on the left side of the dispense module. Plug the other end into the “Dispenser Port” on the rear panel of the Synergy™ HT.

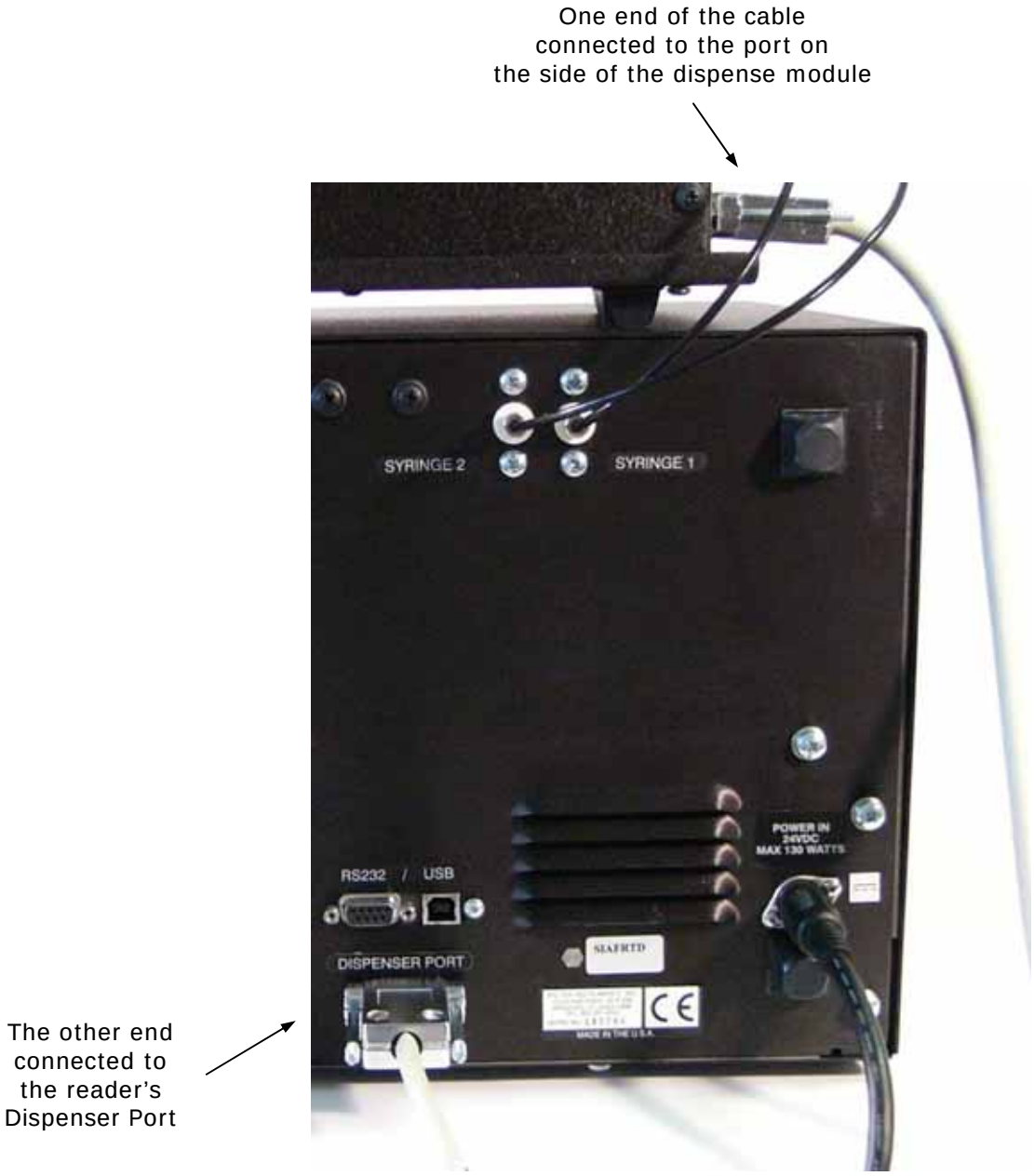

Figure 14: Dispense module connected to the reader (rear view)

15. Locate the injector tip-cleaning **stylus**, packaged in a small plastic cylinder. Attach the cylinder to the back of the dispense module for storage.

9: Connect the Host Computer

The Synergy™ HT is equipped with two types of communication ports: **Serial** (RS-232) and **USB**. Both ports are located on the rear panel of the reader.

- Both types of cables are included in the accessories box. Determine which cable is supported by the **host computer**.
- Connect one end to the appropriate port on the reader (see photo below) and the other end to the appropriate port on the host computer.

Figure 15: RS-232 serial and USB ports on the rear panel (injector model shown)

10: Install the Software on the Host Computer

The Synergy™ HT is controlled by BioTek's Gen5™ or KC4™ software running on a host computer. There is a certain sequence of events that *must* be followed to ensure that the software is properly installed and configured. Please follow the instructions provided in ***Gen5's Getting Started Guide*** or ***KC4's User's Guide*** to install the software.

11: Turn on the Reader

Locate the power switch on the front panel and turn on the Synergy™ HT. The reader will automatically initiate a System Test and eject the microplate carrier.

Figure 16: Carrier eject button (top) and power ON/OFF switch

12: Establish Communication

> ❖ **Important:** If you are using the **USB cable**, refer to the instructions that shipped with the "USB Virtual COM Driver Software" CD to install the necessary drivers and identify the Com Port number.

Using Gen5™

Perform these steps to set and test the communication parameters:

1. Start Gen5.
2. Login if prompted. The default System Administrator password is "**admin**".
3. When the "Welcome to Gen5" screen appears, select **System Menu**.
4. Select **System|Reader Configuration** and click **Add**.
5. Set the **Reader Type** to **Synergy**.
6. Set the **Com Port** to the computer's COM port to which the reader is connected.
   - If using the USB cable, the information can be found via the Windows® Control Panel, under Ports in the Hardware/Device Manager area of System Properties (e.g., USB Serial Port (COM5)).
7. Click the **Test Comm** button. Gen5 will attempt to communicate with the reader.
   - If the communication attempt is successful, return to Gen5's main screen.
   - If the communication attempt is *not* successful, try the following:
     - ➢ Is the reader connected to the power supply and turned on?
     - ➢ Is the communication cable firmly attached to both the reader and the computer?
     - ➢ Did you select the correct Reader Type in step 4?
     - ➢ Choose a different COM port.
     - ➢ If using the USB cable, did you install the driver software? (See ***9: Connect the Host Computer***.)

     If you remain unable to get Gen5 and the reader to communicate with each other, contact BioTek's Technical Assistance Center. See page 6.

Using KC4™

Perform these steps to set and test the communication parameters:

1. Start KC4.
2. Login if prompted. The default System Administrator password is "**admin**".
3. Close any warning messages that appear until KC4's main screen appears.
4. Select **System|Readers**. Scroll through the list of **Available Readers** until you see your model. Highlight (click once on) the model name.
   - **Synergy HT-I** (SIAFR, SIAFR-Custom)
   - **Synergy HTTR-I** (SIAFRT, SIAFRT-Custom)
   - **Synergy HTTR w/Injectors** (SIAFRTD, SIAFRTD-Custom)
5. Click the **Port** button and then click **Setup**. Set the Transmission Rate to **9600** and click **OK**. Select the computer's COM port to which the reader is connected, and then click **OK**.
   - If using the USB cable, the information can be found via the Windows® Control Panel, under Ports in the Hardware/Device Manager area of System Properties (e.g., USB Serial Port (COM5)).
6. Click the **Current Reader** button. KC4 will attempt to communicate with the reader.

❖ If a message appears stating that the software wavelength table does not match the reader filter table, this means that communication has been established and KC4 just needs to update its wavelength table. Click **Yes**.

- If the communication attempt is successful, click **Close** to return to KC4's main screen.
- If the communication attempt is not successful (i.e., an error message appears in KC4), try the following:
  - ➢ Is the reader connected to the power supply and turned on?
  - ➢ Is the communication cable firmly attached to both the reader and the computer?
  - ➢ Did you select the correct model in step 4?
  - ➢ Choose a different COM port.
  - ➢ If using the USB cable, did you install the driver software? (See ***9: Connect the Host Computer***.)

  If you remain unable to get KC4 and the reader to communicate with each other, contact BioTek's Technical Assistance Center. See page 6.

13: Run a System Test

Running a System Test will confirm that the reader is set up and running properly, or will provide an error code if a problem has been detected.

Perform these steps to run the test:

1. **Gen5:** Select **System|Diagnostics|Run System Test**. If prompted to select a reader, select the Synergy HT and click **OK**.

   KC4: Select **System|Diagnostics|Run Optics Test**.
   When the Run Optics Test dialog appears, click **Start**.

2. When the test is complete, a dialog will appear to request additional information. Enter the information (if desired) and click **OK**.

3. The results report will appear. Scroll down toward the bottom, the text should read "SYSTEM TEST PASS."

   - You may wish to print the report and store it with your Installation records.
   - The software stores system test information in its database; you can retrieve it at any time.

> ❖ If an error code is returned, turn to ***Appendix C, Error Codes*** and look up the code. If the problem is something you can fix, do so now and run another System Test. If the problem is something you cannot fix, or if the test continues to fail, contact BioTek's Technical Assistance Center. See page 6 for contact information.

4. **Models with injectors:** Keep the software open and proceed to ***14: Test Injector System***.

   All other models: The installation and setup process is complete! Close the software and turn to page 31 to read about **Product Registration** and **Operational/ Performance Qualification**.

14: Test the Injector System

This section applies to Synergy™ HT models with injectors only.

Perform these steps to test the injector system:

1. If necessary, press the button above the power switch to eject the microplate carrier. Place the **tip priming trough** in the left rear pocket of the carrier. Place the **priming plate** on the carrier.

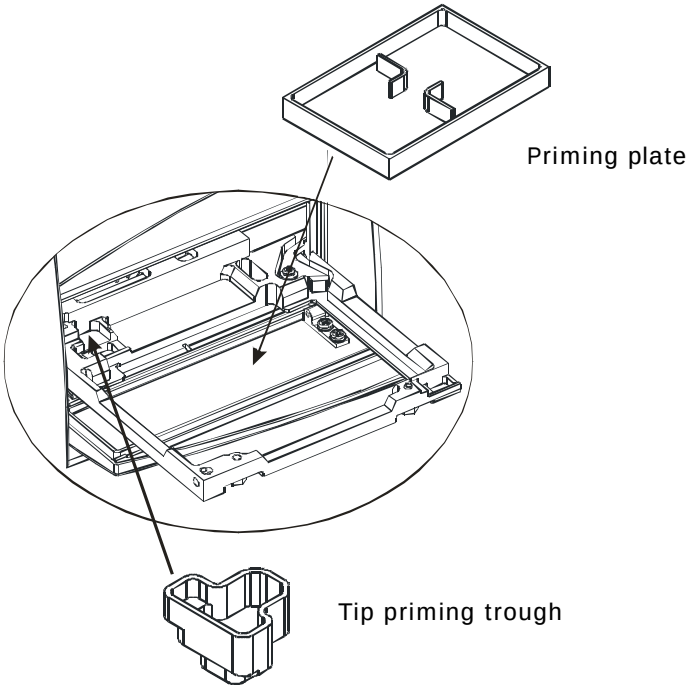

Figure 17: Installing the tip priming trough and priming plate on the microplate carrier

2. Fill the two **reagent bottles** with distilled or deionized water. Place the bottles in their holders, and place the holders directly in front of the syringes. Insert the inlet tubes into the bottles.

❖ The dispense module's setup should resemble the photo in ***Figure 18***. Make any final adjustments, if necessary.

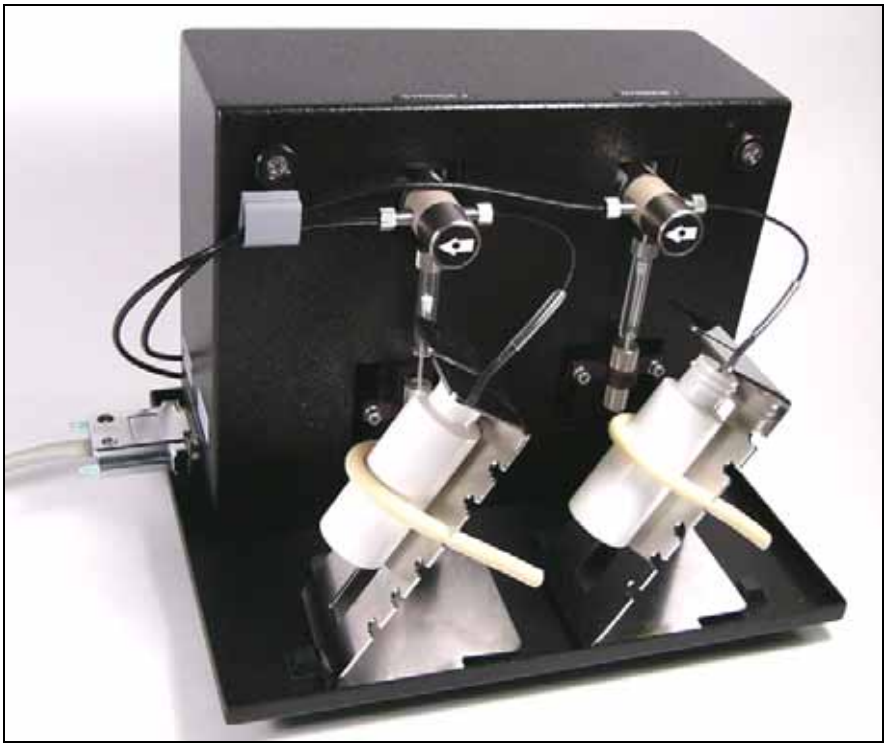

Figure 18: The fully assembled dispense module

3. **Gen5:** Select **System|Reader Control|Synergy (Com<#>)**
   KC4: Select **System|Reader Control**
4. Click the **Dispenser** tab.
5. With **Dispenser** set to **1**, set the **Volume** to **5000 µl** and click **Prime**.

   The syringe should move down and up repeatedly, drawing fluid from the bottle. The fluid should pump through the tubing and dispense into the priming plate. Examine the fittings; no leaks should be detected.

   If leaks are detected, tighten all fittings and repeat the prime. If leaks are still detected, contact BioTek's Technical Assistance Center.
6. When the prime finishes, set **Volume** to **2000 µl** and click **Purge** to clear the fluid lines.
7. Set **Dispenser** to **2** and repeat steps 5 and 6.
8. When finished, remove and empty the priming plate.
9. Close the software.

The installation and setup process is complete! Turn to the next page to read about **product registration** and **Operational/Performance Qualification**.

Operational/Performance Qualification

Your Synergy™ HT Multi-Detection Microplate Reader was fully tested at BioTek prior to shipment and should operate properly following the successful completion of the installation and setup procedures described throughout this chapter.

If you suspect that problems occurred during shipment, if you received the reader back from BioTek following service or repair, and/or if regulatory requirements dictate that Operational/Performance Qualification is necessary, turn to ***Chapter 4, Instrument Qualification*** now to learn about BioTek's recommended OQ/PQ procedures for the Synergy HT.

❖ **Note:** An Installation-Operational-Performance (IQ/OQ/PQ) package for the Synergy HT is available for purchase (PN 7090521). Contact your local BioTek dealer for more information.

Repackaging and Shipping Instructions

Warning! If the reader and/or dispense module has been exposed to potentially hazardous material, decontaminate it to minimize the risk to all who come in contact with the reader during shipping, handling and servicing. Decontamination prior to shipping is required by the U.S. Department of Transportation regulations. See ***Appendix A*** for decontamination instructions.

Caution! Remove the microplate and tip prime trough (if equipped) from the carrier before shipment. Spilled fluids can contaminate the optics and damage the instrument.

Important!

The instrument's packaging design is subject to change over time. If the instructions in this section do not appear to apply to the packaging materials you are using, please contact BioTek's Technical Assistance Center for guidance.

Replace the microplate carrier shipping screw and the shipping panel before repackaging the reader for shipment. Please contact BioTek if you have misplaced either of these items.

If you need to ship the Synergy HT and/or the dispense module to BioTek for service or repair, be sure to use the original packaging materials. Other forms of commercially available packaging are not recommended and can **void the warranty**.

The shipping materials are designed to be used no more than five times. If the original materials have been damaged, lost, or used more than five times, contact BioTek to order replacements (PN 7093001 for the reader, PN 7083001 for the dispense module). See page 6 for contact information..

Perform these steps to prepare the **reader** for shipment:

1. Contact BioTek's Technical Assistance Center for an **RMA** (Return Materials Authorization) number before returning equipment for service. See page 6 for contact information.
2. Decontaminate the reader and, if attached, the dispense module, according to the instructions provided in ***Appendix A***.

3. If you will also be shipping the **dispense module**, perform these steps now:

If using Gen5™:	If using KC4™:
a With the reader on, start Gen5 and select **System|Reader Control|Synergy (Com<#>)**.	a With the reader on, start KC4 and select **System|Readers**.
b Click the **Dispenser** tab. Ensure that 'Dispenser' is set to 1.	b Click the **Configuration** button and select the **Dispenser #1** tab.
c Click the **Maintenance** button.	c Click the **Move Syringe to maintenance position** button.

   d The Syringe 1 bracket will lower. Remove the thumbscrew from underneath the bracket. Carefully unscrew the top of the syringe from the syringe valve. Lift out the syringe and store it in its original box.

   e Set the Dispenser number to 2. Repeat steps **c** and **d** for Syringe 2.

   f Fully detach the dispense module from the reader. Replace the two nylon screws into the Syringe 1 and 2 tubing ports on the rear of the reader. (The screws should be stored in the plastic bag attached to the back of the module.) Set the module aside for the moment.

4. If you have not already done so, retract the microplate carrier and then turn off and unplug the reader.
5. Remove the **lamp assembly** and pack it in bubble wrap (see p. 14).
6. Replace the microplate carrier **shipping screw** (see p. 13).
7. Tip the reader onto its back feet. Attach the **shipping panel** to the bottom of the reader using the four flat-head screws and washers (see p. 11 and 11).
8. Wrap the plastic bag around the reader and shipping panel.
9. Locate the original **outer shipping box**. Place four foam blocks in the four bottom corners of the box. Place the **inner shipping box** inside the outer box (see p. 8 and 9).
10. Grasp the handles on the shipping panel and carefully lower the reader into the inner shipping box.
11. Slide the foam vertical supports into place around the reader. Place the accessories box on top.
12. Close and seal the inner box with tape.
13. Place four foam corner blocks around the inner shipping box. Close and seal the outer box with tape.
14. Write the **RMA number** in large clear numbers on the outside of the box. Ship the box to BioTek (see page 6 for the address).

Perform these steps to prepare the **dispense module** for shipment:

1. If you have not already done so:
   a Contact BioTek's Technical Assistance Center for an **RMA** (Return Materials Authorization) number before returning equipment for service. See page 6 for contact information.
   b Decontaminate the module according to the instructions in ***Appendix A***.
   c Remove the two syringes (see step 3 on the previous page) and store them in their original boxes.
   d Detach the dispense module outlet tubes and communication cable from the reader. Replace the two nylon screws into the Syringe 1 and 2 tubing ports on the rear of the reader.

❖ Refer to the illustrations in ***7: Unpack and Inspect the Dispense Module*** starting on page 17 when performing these steps.

2. Remove the two **inlet tubes** from the syringe valves and store them in their plastic canisters.
3. Remove the two **outlet tubes** from the syringe valves. Attach the clear plastic fitting covers to the fittings of the outlet tubes. Place the tubes in a plastic bag.
4. Place the dispense module inside the **inner shipping box**. Slide the cardboard shipping insert down around the module. Pack the reagent bottle holders in bubble wrap and place them on top of the module. Seal the box with tape.
5. Locate the original **accessories shipping box** and foam end caps. Place the bottom foam end cap into the box.
6. Place the syringes, the inlet tubes, and the outlet tubes inside the cutouts of the bottom foam end cap in the accessories box. Place the dispense module cover on top of the accessories.
7. Cover the accessories with the top foam end cap, place the dispense module cable inside the top of the end cap, and seal the box with tape.
8. Locate the original **outer shipping box** and foam end caps. Insert the bottom foam end cap. Lower the dispense module box into the end cap.
9. Insert the accessories box alongside the dispense module box.
10. Insert the top foam end cap. Close and seal the outer box with tape.
11. Write the **RMA number** in large clear numbers on the outside of the box. Ship the box to BioTek (see page 6 for the address).

Chapter 3

Getting Started

This chapter describes some of the Synergy™ HT's key components and provides an introduction to using Gen5™ or KC4™ to control the instrument.

Key Components 36
- Power Switch, Carrier Eject Button, Microplate Carrier 36
- Lamp Assembly and Filter Wheel Access 37
- Excitation and Emission Filter Wheels 38
- Installing the Time-Resolved Fluorescence Cartridge 41
- Configuring the System for Luminescence Measurements 42
- The External Dispense Module 43

Gen5™ Software 46
- Viewing/Updating the Filter and Wavelengths Tables 46
- Creating Protocols and Experiments 47
- Controlling the Dispense Module 50

KC4™ Software 52
- Viewing/Updating the Filter and Wavelengths Tables 52
- Creating Protocols 53
- Reading Plates 55
- Controlling the Dispense Module 56

Recommendations for Achieving Optimum Performance 59

Key Components

Power Switch, Carrier Eject Button, Microplate Carrier

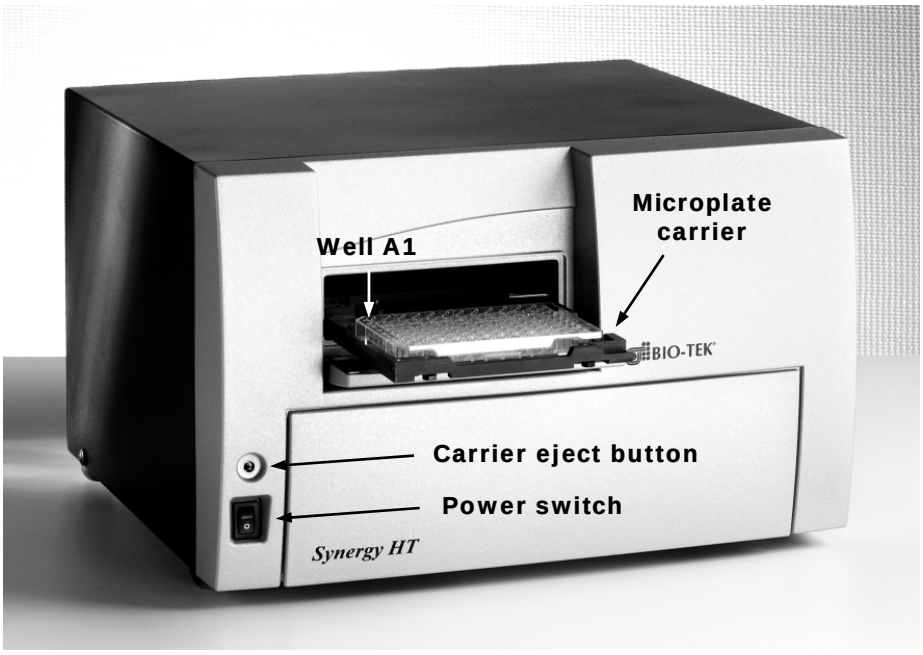

Figure 19: Power switch, carrier eject button, microplate carrier

- The **power switch** is labeled "**I/O**," indicating on and off, respectively. An LED on the switch indicates that the power is on.
- The **microplate carrier eject button** can be used to move the microplate carrier into or out of the measurement chamber, and also to stop the instrument from "beeping" when it encounters an error.
- The **microplate carrier** supports microplates and adapter plates as described in ***Appendix D, Specifications***. The plate is positioned so that well **A1** is in the left rear corner of the carrier. A spring clip holds the plate securely in place. The microplate loading door helps to ensure a light-impermeable measurement chamber. When a plate read is initiated, the carrier slides into the measurement chamber and then moves in the X and Y axes to align each microwell with the top or bottom fluorescence probe, or bottom absorbance probe, as specified in the Gen5™ procedure or KC4™ protocol. When the read is complete, the plate carrier slides to its full-out position.

❖ For fluorescence and luminescence reading modes, the height of the top optical probe can be adjusted. Use the **Top Probe Vertical Offset** option to define how far the top probe shall be offset from the top surface of the plate during the read. In **Gen5**, this option is found in a Read step within a Procedure. In **KC4**, it is in the Reading Parameters dialog. Refer to the software documentation for further instructions.

Lamp Assembly and Filter Wheel Access

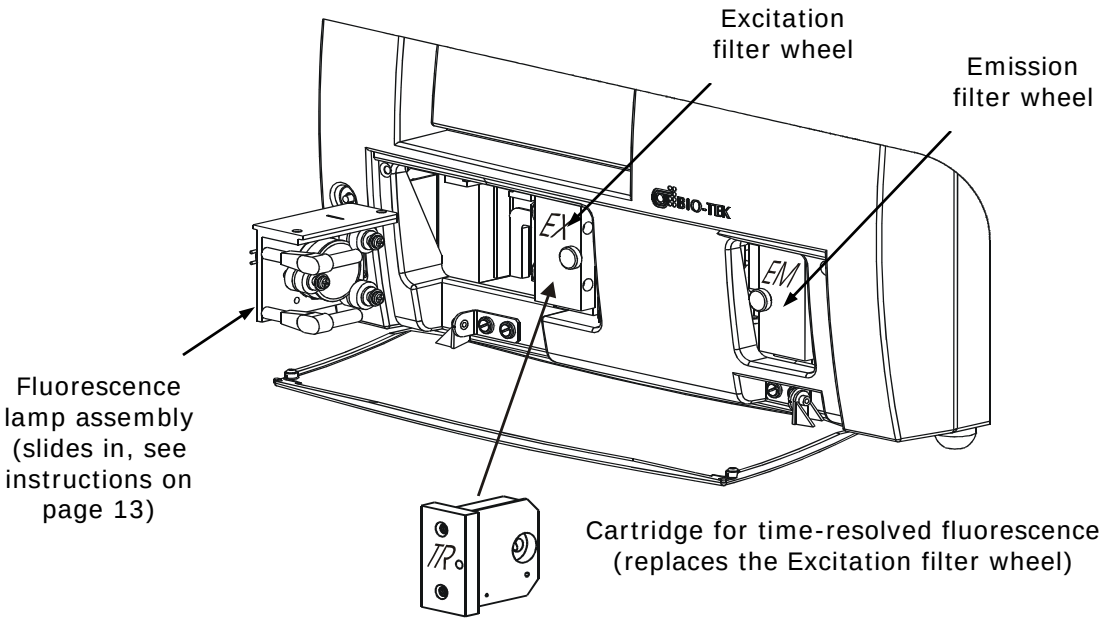

Figure 20: Accessing the fluorescence lamp assembly and filter wheels

- The **fluorescence lamp assembly** and the **excitation** and **emission filter wheels** are accessible via a hinged door on the front of the instrument. To open the door, press on its lower left and right corners until the door opens downward. A diagram showing the location of the lamp assembly and the orientation of the excitation and emission filter wheels is printed on the inside of the hinged door.
- For models with the **Time-Resolved Fluorescence** feature, remove the excitation filter wheel and replace it with the "TR" cartridge before running a time-resolved fluorescence assay. See page 41 for more information on the TR cartridge.

❖ The Synergy™ HT has <u>two</u> lamps: one for standard fluorescence, one for absorbance and time-resolved fluorescence:

Standard Fluorescence: The 20-watt tungsten halogen lamp's life is rated at an average of 1000 hours, and it is user-replaceable. The intensity of the bulb will slowly drop over time until the instrument's run-time self-check detects a low lamp current signal and Gen5™ or KC4™ displays an error message. The lamp (PN 7080500) should be replaced at this time.

Absorbance and Time-Resolved Fluorescence: The xenon flash lamp life is rated at an average of 1 billion flashes. This bulb should outlive the useful life of the reader. If there is a problem with the lamp, however, the intensity may drop and the run-time self-check will detect a low signal level and generate an error message. If this happens, the instrument will require service. Contact BioTek for assistance (this lamp is not user-replaceable).

Excitation and Emission Filter Wheels

All Synergy™ HT models are equipped with one **Excitation** filter wheel and one **Emission** filter wheel, for use with fluorescence and luminescence measurements. (A monochromator is used for absorbance measurements.)

A filter in the Excitation wheel selects the narrow band of light to which the sample will be exposed. A filter in the Emission wheel selects the band of light with the maximum fluorescence signal, to be measured by the photomultiplier (PMT).

Each filter wheel is labeled **EX** or **EM**, and can contain up to four filters and/or black "plugs." A filter can be used in either wheel, but it must be oriented properly, as described below. Each filter and plug is held securely in place with a C-clip filter retainer.

> ❖ **Note:** Each filter has its wavelength and bandpass values printed on its side, with an arrow to indicate the proper direction of light through the filter.

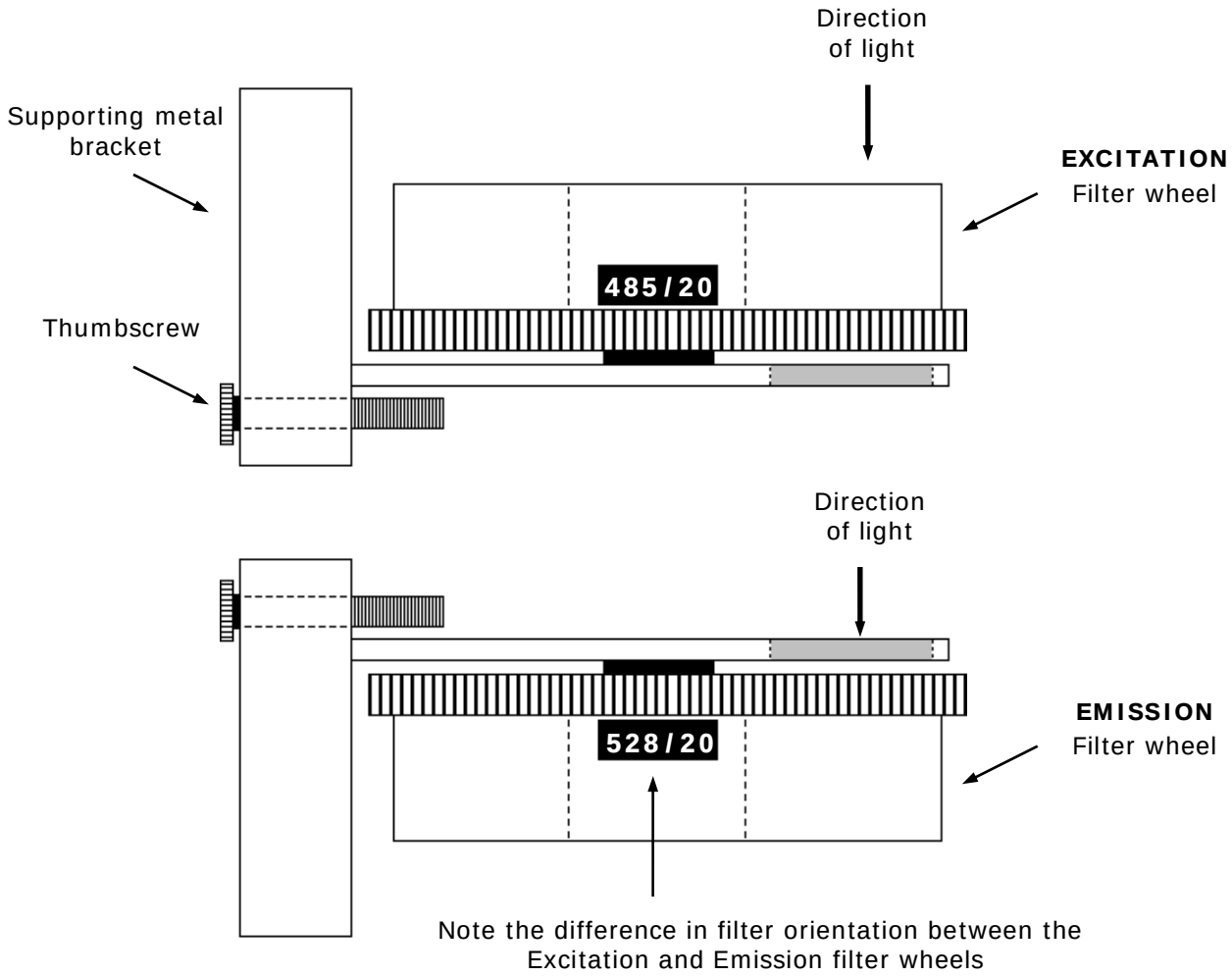

Figure 21: Profiles of the Excitation and Emission filter wheels, showing proper filter orientation

Important! The Synergy™ HT is shipped with a set of Excitation and Emission filters installed, and the Synergy's onboard software is pre-configured with the filter values and their locations.

If you change the contents of a filter wheel, you must update Gen5's or KC4's filter table and then download the information to the reader. The Synergy does not automatically detect which filters are installed.

See page 46 for information on updating Gen5's filter table.

See page 52 for information on updating KC4's filter table.

Removing the Filter Wheels

The filter wheels can be removed if their contents need to be changed. It is important to note that:

- The Excitation and Emission filter wheels are *not* interchangeable and are labeled as follows: EX = Excitation, EM = Emission. (TR = Time-Resolved Cartridge; see page 41.)
- Filter direction within a filter wheel is important, and the direction differs depending on the filter wheel. There is a diagram on the inside of the front panel door indicating this.
- Each filter is marked with an arrow indicating the proper direction of light. Refer to the figures on the previous page for proper filter orientation.

To remove a filter wheel:

1. **Important!** Turn off the instrument.
2. Using your thumbs, push down on the bottom corners of the hinged door on the front of the instrument.
3. Observe the two thumbscrews within the compartment. The left thumbscrew holds the Excitation filter wheel in place; the right secures the Emission filter wheel.
4. Remove the thumbscrew and slide the filter wheel's supporting metal bracket straight out of the compartment. **Note:** The Emission filter wheel will "spring" out when removed. (This is because a shutter behind the wheel closes quickly to protect the PMT.)

Important! When removing or replacing a filter or C-clip filter retainer, do not use a sharp instrument! Use several layers of lens paper and your finger to remove and replace filters and clips. Using a sharp instrument, such as a flat screwdriver, will scratch the filter surface and make it unusable.

Do not touch the filters with your bare fingers!.

To remove a filter or plug:

1. Turn the filter wheel to align the desired filter with the hole in the supporting bracket.
2. Place the bracket on a flat surface, with the filter wheel facing down.
3. Prepare a multi-layered "cushion" of lens paper. Using your finger covered with the lens paper, gently push against the filter and its C-clip retainer until they pop out.

To replace a filter or plug:

1. Hold the metal bracket with the filter wheel facing up.
2. Properly orient the filter or plug (see page 38), and then drop it into the desired filter wheel location.
3. Using your fingers, squeeze the sides of the C-clip filter retainer, and then insert it into the top of the hole containing the new filter. Cover your finger with several layers of lens paper, and then push down on all sides of the C-clip until it sits flush against the filter.
4. Clean both sides of the filter with lens paper.

To reinstall a filter wheel:

1. Ensure that all filters and/or plugs are inserted properly (see above).
2. Slide the filter wheel back into its chamber.
3. Replace the thumbscrew.
4. Close the front door.
5. Turn on the instrument.

Installing the Time-Resolved Fluorescence Cartridge

For Synergy™ HT models that support time-resolved fluorescence, the "TR" cartridge must be installed in place of the Excitation filter wheel before a TRF assay can be run. The TR cartridge allows light from the xenon flash bulb to be input to the fluorescence optical system within the Synergy instrument. Excitation wavelengths are selected by adjusting the monochromator from 200 to 999 nm in 1-nm increments, with a fixed bandwidth of 10 nm.

- The Synergy HT automatically detects the presence of the TR cartridge. At the start of a time-resolved fluorescence assay, the operator will be prompted to install the TR cartridge if it is missing.

To install the TR cartridge:

1. **Important!** Turn off the instrument.
2. Using your thumbs, push down on the bottom corners of the hinged door on the front of the instrument. Observe the two thumbscrews within the compartment. The left thumbscrew holds the Excitation filter wheel in place. See the figure on page 37.
3. Remove the left thumbscrew and slide the filter wheel's supporting metal bracket straight out of the compartment.
4. Slide the TR cartridge into the compartment and replace the thumbscrew. Close the front door and turn on the instrument.

- To specify time-resolved fluorescence in a **Gen5** protocol, check the 'Time Resolved' box in a Read step in the procedure. To specify time-resolved fluorescence in a **KC4** protocol, check the 'Time-Resolved' box in the Reading parameters dialog. When defining a filter set using either software package, click the **Options** button to specify the length of time to delay before collecting readings and the length of time for which readings will be taken.
- See page 47 for more information on creating Gen5 protocols.
- See page 53 for more information on creating KC4 protocols.

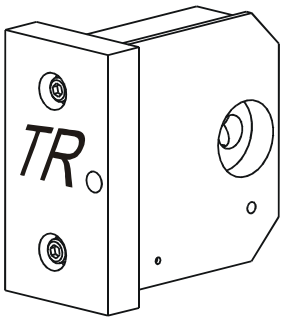

Figure 22: The "TR" cartridge, for time-resolved fluorescence assays

Configuring the System for Luminescence Measurements

- For best results when taking luminescence measurements, the **Excitation** filter wheel should have no empty locations, and it should have at least one "plug" (also referred to as a "dummy filter") installed to prevent light from reaching the samples. Remove the Excitation filter wheel (see page 39) and examine its contents; ensure that there are no empty locations and there is at least one plug installed.
- If your tests require that the light emitted from the samples remain unfiltered, the **Emission** filter wheel should have an empty location in it. Remove the Emission filter wheel and examine its contents; ensure that there is an empty location.
- If you made any changes to either filter wheel, you must update Gen5's or KC4's filter table. Select "PLUG" to indicate the presence of a plug and "HOLE" to indicate an empty location. Click **Send Values** (or **Filters**) to download the information to the reader.

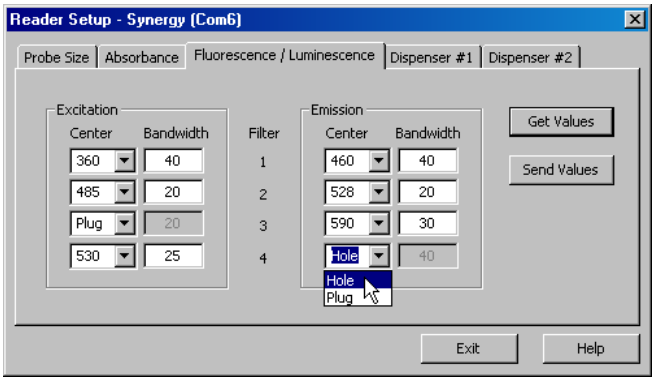

Updating Gen5's filter table; for complete instructions, see page 46.

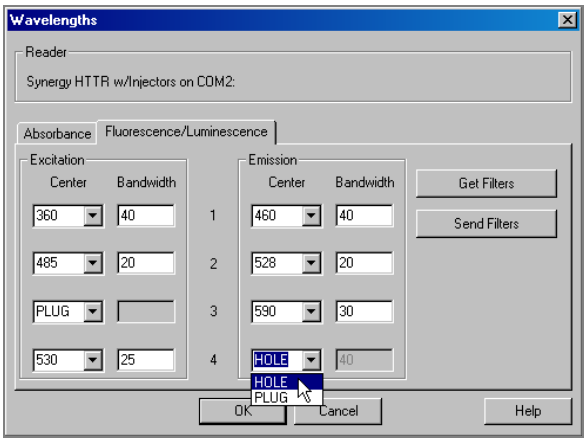

Updating KC4's filter table; for complete instructions, see page 52.

- When defining a filter set in a Read step in a **Gen5** procedure, selecting 'Hole' indicates the empty location in the Emission filter wheel. See page 47 for information on Read steps and procedures.

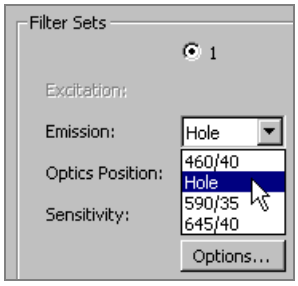

- When defining a filter set in a **KC4** Luminescence or Multi-Mode protocol, selecting 'Lum/E' indicates the empty location in the Emission filter wheel. See page 53 for information on protocols.

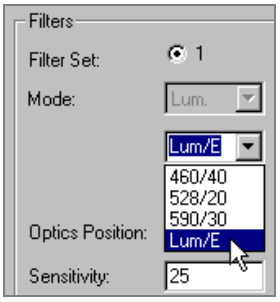

The External Dispense Module

This section applies to Synergy™ HT models with injectors only.

The dispense module pumps fluid from the supply bottles to injector heads located inside the instrument. Fluid is injected into one well at a time.

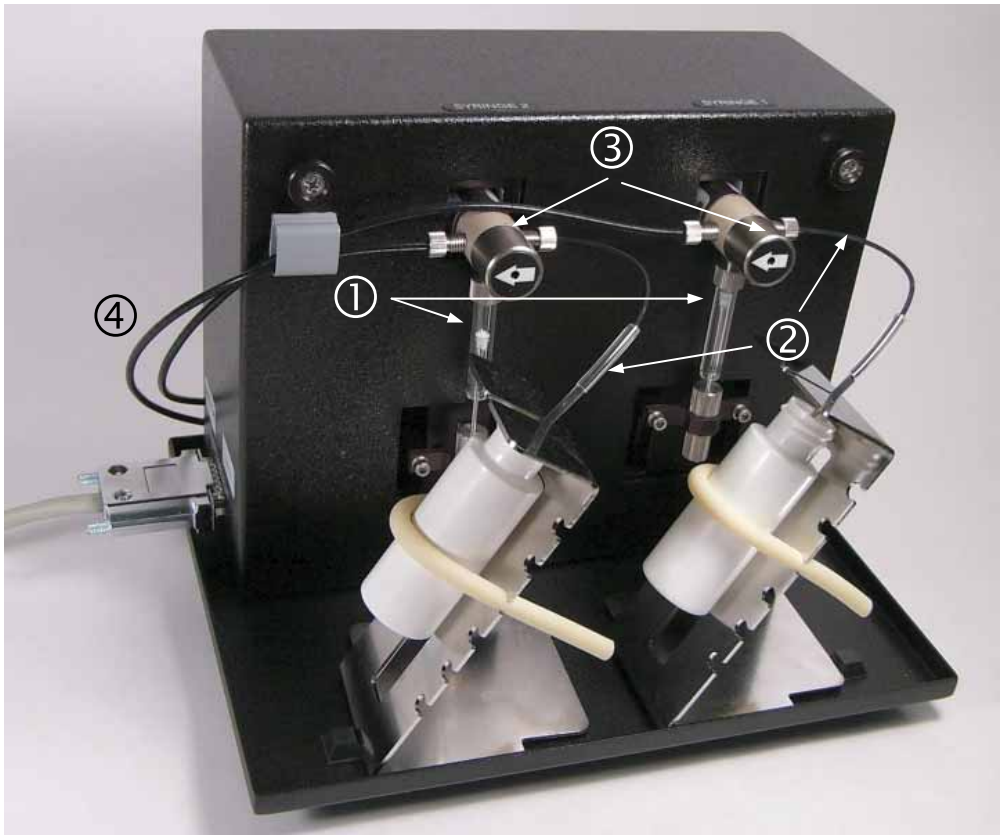

Figure 23: Dispense module components

① Two 250-µL **syringes** draw fluid from the supply bottles.

② **Inlet tubes** transport fluid from the supply vessels to the syringes. These tubes are short pieces of opaque PTFE (Teflon) tubing connected to stainless steel probes on one end and threaded fittings on the other end.

③ **Three-way valves** switch the syringe flow from the inlet tubes to the outlet tubes.

④ **Outlet tubes** transport fluid from the syringes into the instrument, through the tubing ports on the Synergy HT's rear panel. The outlet tubes are opaque PTFE tubes with threaded fittings on each end that are used to deliver fluid from the syringes to the instrument.

Inside the Synergy™ HT, two Teflon tubes transport fluid from the tubing ports on the rear of the instrument to the two injectors. As shown below, both injectors are positioned directly above the bottom fluorescence optical probe.

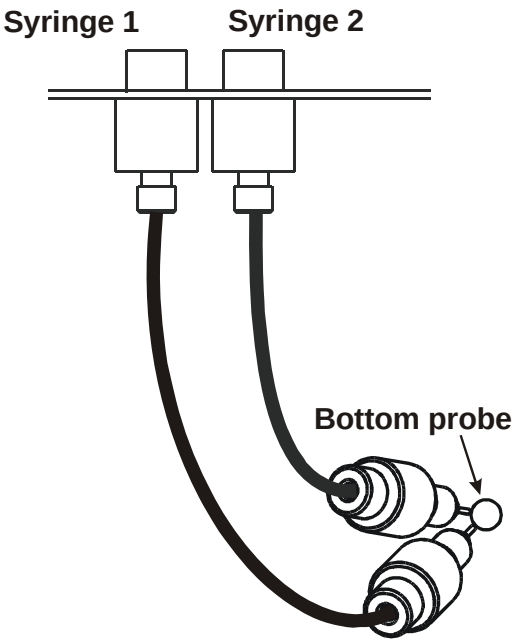

Figure 24: Close-up view of the injectors inside the instrument

❖ **Note:** The tubing and injectors should be cleaned at least quarterly. See ***Chapter 5, Preventive Maintenance*** for more information.

Priming the System

Before an assay requiring fluid dispense is run, the system should be fully primed with the reagent or other fluid used by the assay. At the start of the assay (and optionally at the start of each dispense to a well), an additional injector tip prime can be performed. The tip prime compensates for any fluid loss at the injector tip due to evaporation since the last dispense. All priming activities are controlled via Gen5™ (see page 50) or KC4™ (see page 56).

Both types of primes require a fluid reservoir to be present on the microplate carrier:

- The **priming plate** is about the same size as a standard microplate, and is placed on the microplate carrier for a Prime operation (to prime the dispense system with fluid).
- The **tip priming trough** is a small, removable priming cup located in the left rear of the carrier, and is used for performing the Tip Prime before dispensing. The trough holds up to 1.5 ml of liquid and must be periodically emptied and cleaned by the user.

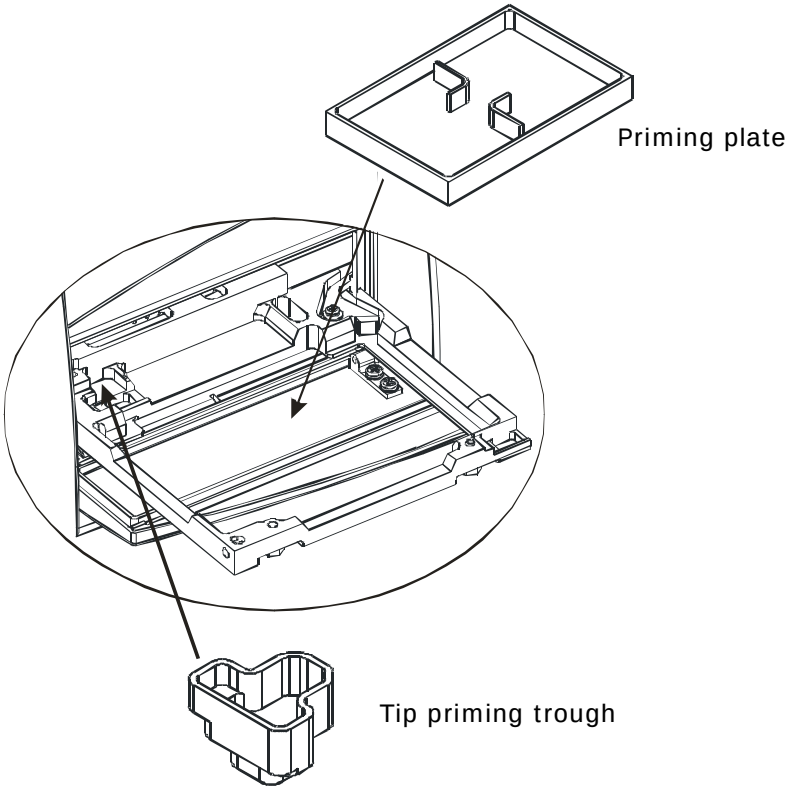

Figure 25: Priming plate and tip priming trough

Gen5™ Software

BioTek's Gen5 software supports all Synergy™ HT reader models. Use Gen5 to control the reader and the dispense module, perform data reduction and analysis on the measurement values, print / export results, and more. This section provides brief instructions for creating experiments and reading plates. It also explains how to use Gen5 to perform some functions that are specific to the dispense module.

Viewing / Updating the Filter and Wavelengths Tables

The Synergy HT ships with a set of Excitation and Emission filters installed, and the reader's onboard software is pre-configured with the filter values and their locations. When Gen5 establishes communication with the reader, it "asks" for this information and then stores it in a filter table on the computer.

To view this table in Gen5, select **System | Reader Configuration,** highlight the Synergy reader, and click **View / Modify.** Click **Setup** and then click the **Fluorescence / Luminescence** tab.

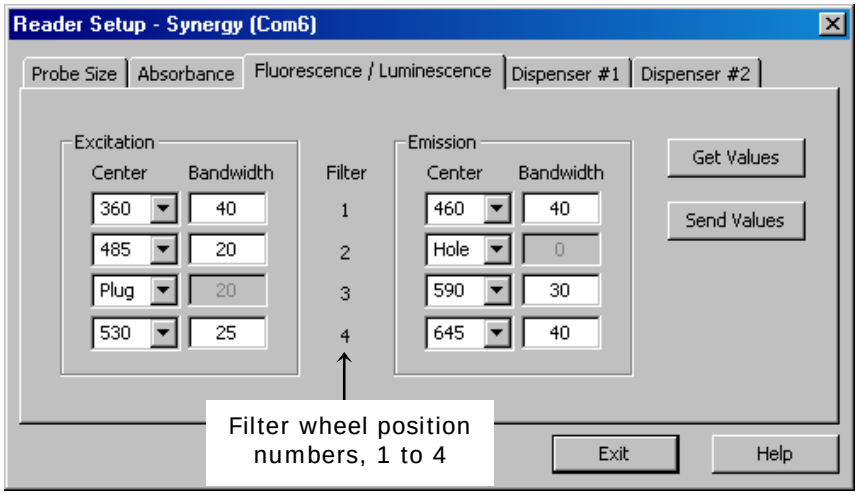

Regarding the **Absorbance** Wavelengths table:

The Synergy HT performs absorbance reads in the range of 200 to 999 nm.

Click the Absorbance tab to specify and calibrate 6 wavelengths to be made available as default selections within a protocol's Reading Parameters dialog.

To change the settings and download them to the instrument:

1. Enter filter values in the **Center** fields, or use the drop-down boxes to select 'PLUG' or 'HOLE'.
2. For each **Center** wavelength value, enter its accompanying **Bandwidth**. (The Bandwidth is printed on the side of each filter.)
3. When finished, click **Send Values** to download the information to the reader. (Clicking **Get Values** uploads information *from* the reader.)
4. Click **OK** to save the settings and close this dialog. The settings become available for selection in the Read step dialog in a Procedure.

Creating Protocols and Experiments

In Gen5™, a **Protocol** contains instructions for controlling the reader and (optionally) instructions for analyzing the data retrieved from the reader. At a minimum, a protocol must specify the **Procedure** for the assay you wish to run. After creating a protocol, create an **Experiment** that references the protocol. You'll run the experiment to read plates and analyze the data.

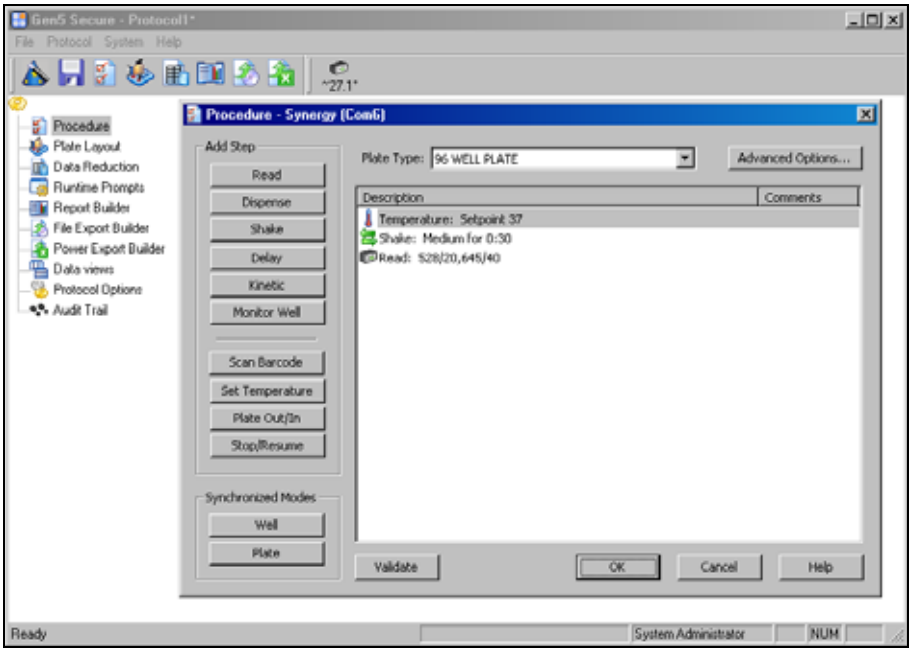

Figure 26: Defining the Procedure within a Gen5 Protocol

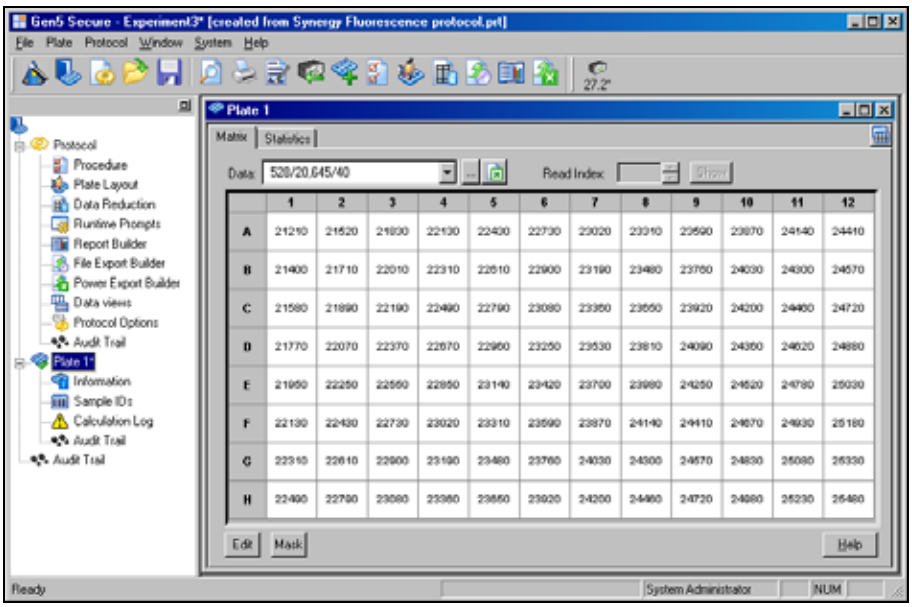

Figure 27: An Experiment (containing measurement data), based on a pre-defined protocol

The instructions below *briefly* describe how to create a simple protocol in Gen5. See Gen5's Help system for complete instructions.

To create a **Protocol** in Gen5:

1. Select **File|New Protocol**.
2. Open the **Procedure** dialog. If prompted to select a reader, select the Synergy HT and click OK.
3. Add **Steps** to the procedure for shaking or heating the plate, dispensing fluid, reading the plate, and more. Click the **Validate** button to verify that the reader supports the defined steps, and then click **OK**.

   Tips:

   - Add a **Dispense** step to define the volume and rate at which fluid will be dispensed, and from which dispenser.
   - Add a **Read** step to specify the detection method and filter sets or wavelength values, enable time-resolved fluorescence, and set the Top Probe Vertical Offset value.
   - To define a **Kinetic** read, place an Endpoint Read step inside a Kinetic Start/End loop.

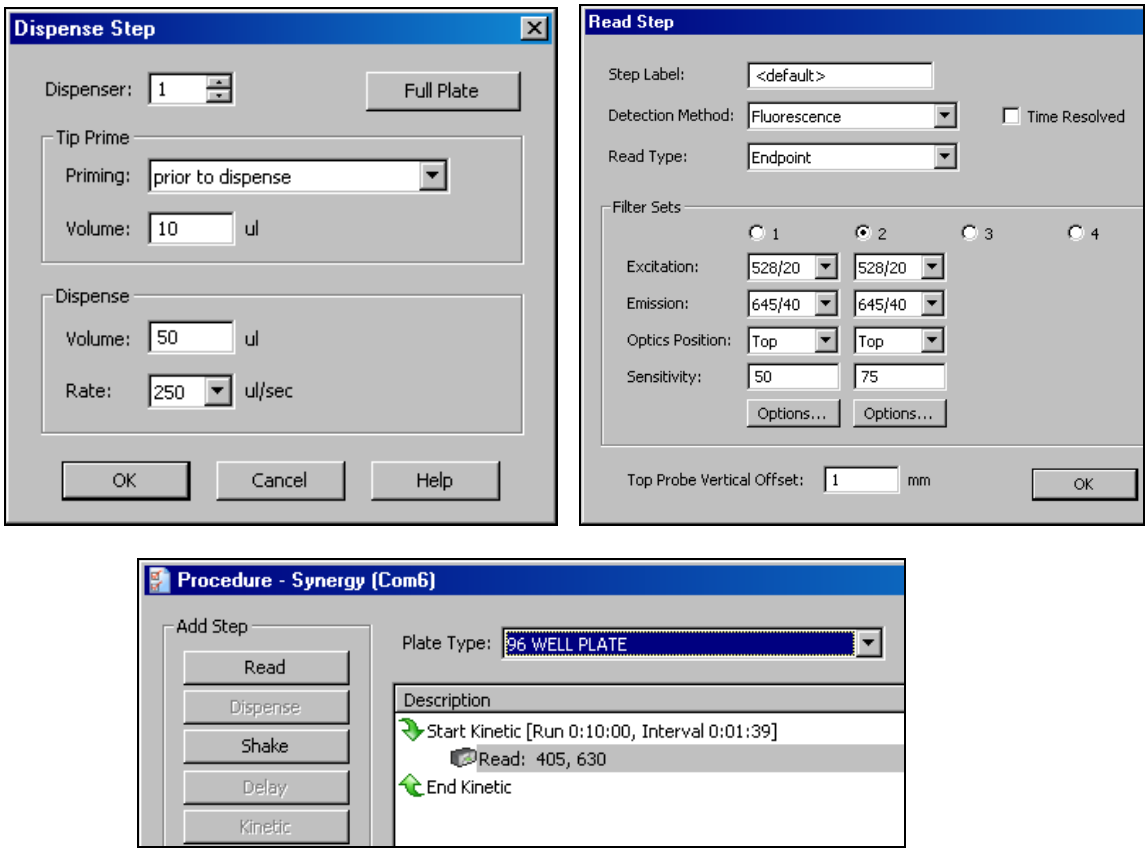

Figure 28: Clockwise from upper left: defining a Dispense step, defining a Read step, defining a Kinetic read (Kinetic + Endpoint Read steps).

4. Open the **Plate Layout** dialog and assign blanks, samples, controls, and/or standards to the plate.
5. Open the **Data Reduction** dialog to add data reduction steps. Categories include Transformation, Well Analysis, Curve Analysis, Cutoff, and Validation.
6. Create a report or export template, via the **Report Builder**, **File Export Builder**, or **Power Export Builder** options.
7. Select **File|Save As** and give the file an identifying name.

The instructions below *briefly* describe how to create a simple Experiment and then read a plate in Gen5. See Gen5's Help system for complete instructions.

To create an **Experiment** and read a plate using Gen5:

1. Select **File|New Experiment**.
2. Select the desired protocol and click **OK**.
3. Highlight a plate in the menu "tree" and select **Plate|Read**. The Plate Reading dialog will appear.
4. Click **READ**. The door will open and the carrier will extend (if it is not already extended).
5. Place the plate on the carrier and click **OK** to begin the read.
6. When the read is complete, measurement values will appear in Gen5. To view them, select the desired data set (e.g., "528/20,645/40") from the **Data** drop-down list.
7. Select **File|Save As** and give the file an identifying name.

Controlling the Dispense Module

This section applies to Synergy™ HT models with injectors only.

Gen5™ is used to perform several dispense module-specific functions, including initializing, priming, and purging. Gen5 also contains certain configuration items that must be set before using the dispense module. Read the following sections to become familiar with these functions and configuration items.

Initialization

If the dispense module was connected to the reader before the reader was turned on, or if a System Test was run via Gen5, the dispense module should initialize automatically. If for any reason the module does not initialize automatically, you can initialize it from Gen5:

1. In Gen5, select **System|Reader Control|Synergy(Com<#>)** and click the **Dispenser** tab.
2. Select the desired **Dispenser** number (1 or 2) and click the **Initialize** button. The syringe drive will move to its home position and its sensors will be verified. Upon successful completion, the **Initialized** field should show "Yes".

Prime Utility

Before running an experiment with a Dispense step, the dispense module and its associated tubing must be primed with the fluid to be used. Gen5 provides a special utility for this task. To prime the dispense module:

1. Fill the supply bottle with a sufficient volume of the fluid to be used for the prime and the assay. Insert the appropriate inlet tube into the bottle.
2. **Important!** Place the priming plate on the carrier.
3. In Gen5, select **System|Reader Control|Synergy(Com<#>)** and click the **Dispenser** tab.
4. Select the **Dispenser** number (1 or 2) associated with the supply bottle.
5. Enter the **Volume** to be used for the prime, from 5 to 5000 µL.
   The minimum recommended prime volume is 1100 µL.
6. Select a prime **Rate**, in µL/second.
7. Click **Prime** to start the process.
8. When the process is complete, carefully remove the priming plate from the carrier and empty its contents. If the priming plate is empty, the prime volume was too low.

Purge Utility

Gen5™ provides a special utility to purge fluid from the dispense tubing and syringe by pumping the fluid in reverse, back into the supply bottle. To purge the dispense module:

1. In Gen5, select **System|Reader Control|Synergy(Com<#>)** and click the **Dispenser** tab.
2. Select the **Dispenser** number (1 or 2) associated with the supply bottle.
3. Enter the desired purge **Volume** in µL.
4. Select a prime **Rate** in µL/second.
5. Click **Purge** to start the process.

Syringe Maintenance Position

Gen5 provides access to special syringe setup functions for maintenance and calibration purposes. If a syringe needs to be installed or replaced, it must first be moved to its "Maintenance Position." To do this using Gen5:

1. In Gen5, select **System|Reader Control|Synergy(Com<#>)** and click the **Dispenser** tab.
2. Select the appropriate **Dispenser** number (1 or 2) associated with the syringe.
3. Click **Maintenance.** The syringe plunger will move to its furthest-from-home position. The syringe can then be disconnected form the drive bracket and unscrewed from the valve.
4. See "Install Dispense Module Components" in ***Chapter 2, Installation*** for information on installing/removing the syringes.

Important! Do not change the syringe positions or calibrate the dispensers unless instructed to do so as part of installation, upgrade, or maintenance.

KC4™ Software

BioTek's KC4 software supports all Synergy™ HT reader models. Use KC4 to control the reader and the dispense module; perform data reduction and analysis on the measurement values; print and export results; and more. This section provides brief instructions for creating protocols and reading plates. It also explains how to use KC4 to perform some functions that are specific to the dispense module.

Viewing/Updating the Filter and Wavelengths Tables

The Synergy HT ships with a set of Excitation and Emission filters installed, and the reader's onboard software is pre-configured with the filter values and their locations. When KC4 first establishes communication with the reader, it "asks" for this information and then stores it in a filter table on the computer. This table can be viewed in KC4 by selecting **System|Reader** and clicking the **Filters/ Wavelengths** button. Click the **Fluorescence/Luminescence** tab to view the Excitation and Emission filter wheel information retrieved from the Synergy:

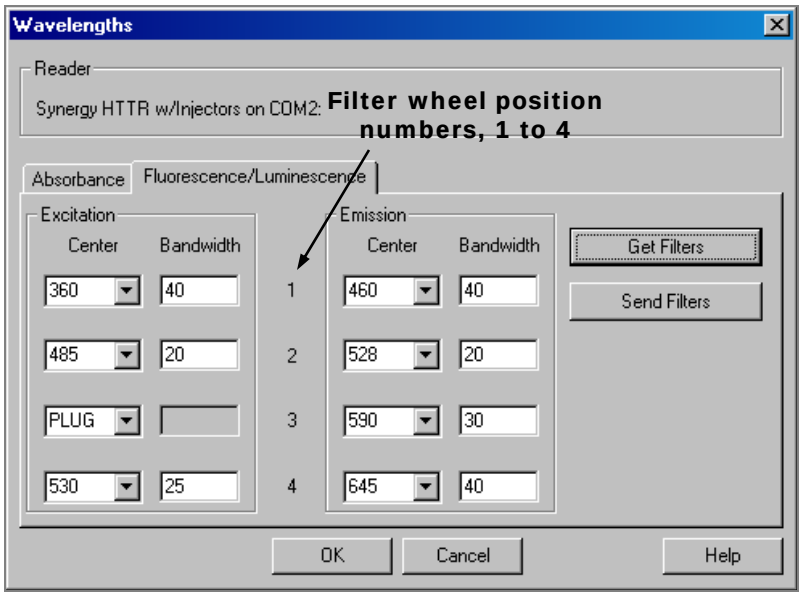

Regarding the **Absorbance** Wavelengths table:

The Synergy HT performs absorbance reads in the range of 200 to 999 nm.

Click the Absorbance tab to specify and calibrate 6 wave-lengths to be made available as default selections within a protocol's Reading Parameters dialog.

To change the settings and download them to the instrument:

1. Enter wavelength values in the **Center** fields, or use the drop-down boxes to select 'PLUG' or 'HOLE'.
2. For each **Center** wavelength value, enter its accompanying **Bandwidth**. (The Bandwidth is printed on the side of each filter.)
3. When finished, click **Send Filters** to download the information to the reader. (**Get Filters** uploads information *from* the reader.)
4. Click **OK** to save the settings and close this dialog. The settings become available for selection in the protocol's Reading Parameters dialog.

Creating Protocols

In KC4™, a **protocol** contains instructions for controlling the reader and (optionally) instructions for analyzing the data retrieved from the reader. At a minimum, a protocol must specify the **Reading parameters** for the assay you wish to run.

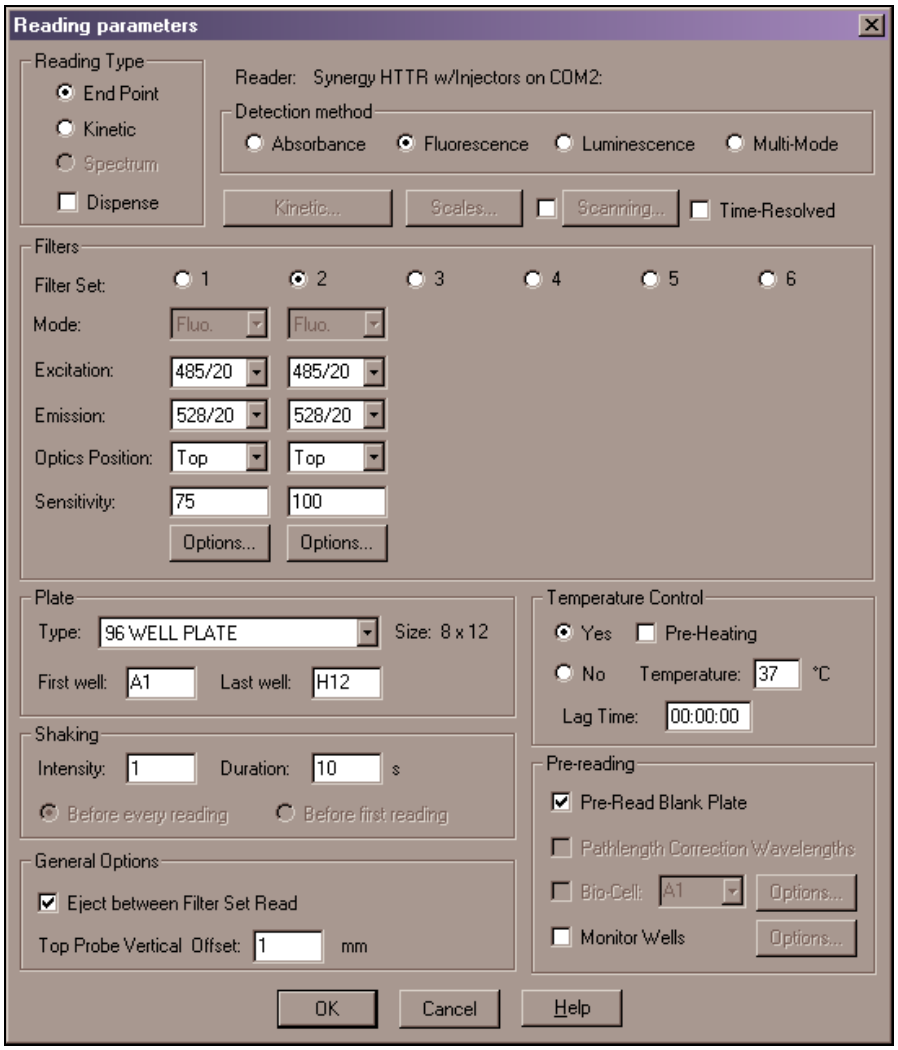

Figure 29: KC4's Reading parameters dialog (software version 3.4)

The instructions on the following pages briefly describe how to create protocols in KC4. Be sure to refer to KC4's Help system and User's Guide for complete instructions.

❖ **Note:** KC4 software versions 3.4 and greater offer a **Multi-Mode** option within the Reading Parameters dialog. This option allows you to define more than one detection method in a single protocol. See KC4's Help system or User's Guide for more information.

To create an **Absorbance** protocol in KC4™:

1. Select **Data|New Plate**. If prompted to select a protocol, select "Empty Protocol" and click **OK**. If *not* prompted, select **Protocol|New**.
2. Select **Protocol|Reading**. The Reading parameters dialog will appear.
3. Set **Detection Method** to Absorbance.
4. Select a **Reading Type** of Endpoint, Kinetic, or Spectrum. For a Kinetic protocol, click the **Kinetic** button to define the Run Time and Interval.
5. Select or specify the **Wavelengths** at which the plate will be read.
6. Select a **Plate Type**.
7. Enable **Temperature Control** and / or **Shaking** if necessary. Select any **Pre-Reading** parameters.
8. Click **OK** to verify the parameters and return to the main screen.
9. Select **Protocol|Save As** and give the protocol an identifying name.

To create a **Fluorescence** or **Luminescence** (non-Dispense) protocol in KC4:

1. Select **Data|New Plate**. If prompted to select a protocol, select "Empty Protocol" and click **OK**. If *not* prompted, select **Protocol|New**.
2. Select **Protocol|Reading**. The Reading parameters dialog will appear.
3. Set **Detection Method** to Fluorescence or Luminescence.
4. Select a **Reading Type** of Endpoint or Kinetic. For a Kinetic protocol, click the **Kinetic** button to define the Run Time and Interval.
5. If supported by the current Synergy™ HT model, checking **Time-Resolved** enables the Time Resolved Fluorescence feature.
6. Define the **Filter Sets** by selecting the filter(s), Optics Position, and Sensitivity.
7. Select a **Plate Type**.
8. Enable **Temperature Control** and / or **Shaking** if necessary. Select any **Pre-Reading** parameters.
9. Click **OK** to verify the parameters and return to the main screen.
10. Select **Protocol|Save As** and give the protocol an identifying name.

To create a Fluorescence or Luminescence **Dispense** protocol in KC4™ (for the Synergy™ HTTR w/Injectors):

1. Select **Data|New Plate**. If prompted to select a protocol, select "Empty Protocol" and click **OK**. If not prompted, select **Protocol|New**.
2. Select **Protocol|Reading**. The Reading parameters dialog will appear.
3. Set **Detection Method** to Fluorescence or Luminescence.
4. Check the **Dispense** box.
5. Select a **Reading Type** of Endpoint or Kinetic.
6. Define **the Filter Sets** (up to 2) by selecting the filter(s), Optics Position, and Sensitivity.
7. Select a **Plate Type**.
8. Enable **Temperature Control** if necessary. Select any **Pre-Reading** parameters.
9. Click the **Read & Dispense** button. The Read & Dispense dialog will appear.
   - Select a **Read Mode** of Well or Plate.
   - Click the **Dispense, Shake,** and **Read** buttons to add steps to the protocol.
   - When finished, click **OK** to return to the Reading parameters dialog.
10. Click **OK** to verify the parameters and return to the main screen.
11. Select **Protocol|Save As** and give the protocol an identifying name.

Reading Plates

To read a plate using KC4:

1. Select **Data|New Plate**.
2. If prompted to select a protocol, select a protocol and click **OK**. If not prompted, select **Protocol|Open** and select a protocol.
3. Select **Data|Read Plate**. The Plate Reading dialog will appear.
4. Click **Start Reading**. The door will open and the plate carrier will extend.
5. Place the plate on the carrier and click **START READING** to begin the read.
6. When the read is complete, the measurement values will appear in KC4.
7. Select **Data|Save As** and give the file an identifying name.

Controlling the Dispense Module

This section applies to Synergy™ HT models with injectors only.

KC4™ is used to perform several dispense module-specific functions, including initializing, priming, and purging. KC4 also contains certain configuration items that must be set before using the dispense module. Read the following sections to become familiar with these functions and configuration items.

Initialization

If the dispense module was connected to the reader before the reader was turned on, or if an Optics Test was run via KC4, the dispense module should initialize automatically. If for any reason the module does not initialize automatically, you can initialize it from KC4:

1. In KC4, select **System|Readers**, click the **Configuration** button, and then click the appropriate **Dispenser** tab (#1 or #2).
2. Click the **Initialize** button.
3. The syringe drive will move to its home position and its sensors will be verified. Upon successful completion, the Status should show "Initialized."
4. Repeat for the other syringe (Dispenser #2).

Prime Utility

Before running a Read & Dispense protocol, the dispense module and its associated tubing must be primed with the fluid to be used. KC4 provides a special utility for this task. To prime the dispense module:

1. Fill the supply bottle with a sufficient volume of the fluid to be used for the prime and the assay. Insert the appropriate inlet tube into the bottle.
2. **Important!** Place the priming plate on the carrier.
3. In KC4, select **System|Reader Control** and click the **Dispenser** tab.
4. Select the **Dispenser** (1 or 2) associated with the supply bottle.
5. Enter the **Volume** to be used for the prime, from 5 to 5000 µL.
   The minimum recommended prime volume is 1100 µL.
6. Select a prime **Rate**, in µL/second.
7. Click **Prime** to start the process.
8. When the process is complete, carefully remove the priming plate from the carrier and empty its contents. If the priming plate is empty, the prime volume was too low.

Purge Utility

KC4 provides a special utility to purge fluid from the dispense tubing and syringe by pumping the fluid in reverse, back into the supply bottle. To purge the dispense module:

1. In KC4™, select **System|Reader Control** and click the **Dispenser** tab.
2. Select the **Dispenser** (1 or 2) associated with the supply bottle.
3. Enter the desired purge **Volume** from 5 to 5000 µL.
4. Select a prime **Rate** in µL/second.
5. Click **Purge** to start the process.

Emptying the Tip Priming Trough

Read & Dispense protocols can specify a **tip prime** to compensate for any fluid loss at the dispense tip due to evaporation since the last dispense. Tip priming is performed in a small, removable priming trough located in the left rear of the carrier (see page 45). The trough holds up to 1.5 ml of liquid and must be periodically emptied and cleaned by the user.

> ❖ If the Tip Priming Trough overflows, you should clean the microplate carrier and possibly the internal surface beneath the carrier. See ***Chapter 5, Preventive Maintenance*** for instructions. See also ***Appendix A*** for decontamination instructions.

KC4 must be “told” when the trough has been emptied. To empty the tip priming trough:

1. If the microplate carrier is inside the reader, press the carrier eject button.
2. Carefully remove the trough from the carrier and empty it. Clean or decontaminate the trough if necessary.
3. In KC4, select **System|Reader Control** and click the **Dispenser** tab. The Tip Prime Trough value shows KC4’s estimate of how much fluid is in the trough.
4. Click **Dump all Tip Prime Trough(s)**. The Tip Prime Trough value will reset to ‘1500 µL remaining’ meaning the trough is empty.

> ❖ **Note:** When running a Read & Dispense protocol, KC4 may prompt you to empty the tip prime trough. In this case, KC4 will automatically open the **System|Reader Control**, **Dispenser** dialog.

Syringe Maintenance Position

KC4 provides access to special syringe setup functions for maintenance and calibration purposes. If a syringe needs to be installed or replaced, it must first be moved to its "Maintenance Position." To do this using KC4:

1. In KC4, select **System|Readers,** click the **Configuration** button, and then click the appropriate **Dispenser** tab (#1 or #2).
2. Click **Move Syringe to maintenance position.**

   The syringe plunger will move to its furthest-from-home position. The syringe can then be disconnected form the drive bracket and unscrewed from the valve. See "Install Dispense Module Components" in ***Chapter 2, Installation*** for information on installing/removing the syringes.
3. Click **OK** to close the dialog.

Important! Do not change the syringe positions or calibrate the dispensers unless instructed to do so as part of installation, upgrade, or maintenance.

Recommendations for Achieving Optimum Performance

- Microplates should be perfectly clean and free of dust or bottom scratches. Use new microplates from sealed packages. Do not allow dust to settle on the surface of the solution; use microplate covers or seals when not reading the plate. Filter solutions to remove particulates that could cause erroneous readings.
- Before preparing your microplates, make sure the instrument is on and successfully communicating with the controlling software. You may want to run a System Test if the instrument has not been turned off/on in a few days. Design your Gen5 or KC4 protocol in advance as well, to ensure that the intended reading parameters are used and to avoid any last-minute corrections.
- Although the Synergy™ HT supports standard flat, U-bottom, and V-bottom microplates, the reader achieves optimum performance with optically clear, flat-bottomed wells. See ***Appendix D, Specifications*** for more information on the supported plates.
- Non-uniformity in the optical density of the well bottoms can cause loss of accuracy, especially with U- and V-bottom polyvinyl microplates. Check for this by reading an empty microplate. Dual wavelength readings can eliminate this problem, or bring the variation in density readings to within acceptable limits for most measurements.
- Inaccuracy in pipetting has a large effect on measurements, especially if smaller volumes of liquid are used. For best results, use at least 100 µl per well in a 96-well plate and 25 µL in a 384-well plate.
- Dispensing solution into 384-well plates often traps air bubbles in the wells, which may result in inaccurate readings. A dual-wavelength reading method usually eliminates these inaccuracies; however, for best results, remove the air bubbles by degassing the plate in a vacuum chamber before reading.
- The inclination of the meniscus can cause loss of accuracy in some solutions, especially with small volumes. Agitate the microplate before reading to help bring this problem within acceptable limits. Use Tween® 20, if possible (or some other wetting agent) to normalize the meniscus for absorbance measurements. Some solutions develop menisci over a period of several minutes. This effect varies with the brand of microplate and the solution composition. As the center of the meniscus drops and shortens the light path, the density readings change. The meniscus shape will stabilize over time.

- To keep the dispense system in top condition, flush and purge the fluid lines with deionized (DI) water every day or upon completion of an assay run, whichever is more frequent. Some reagents may crystallize or harden after use, clogging the fluid passageways. Flushing the tubing at the end of each day, letting the DI water soak them overnight, and then purging the lines at the beginning of each day ensures optimal performance of the dispense system. See ***Chapter 5, Preventive Maintenance*** for more information.
- **For models with injectors:** When dispensing volumes less than or equal to 20 µL / well, we recommend specifying a tip prime volume that is equal to the dispense volume. For dispense volumes greater than 20 µL / well, we recommend a tip prime volume of 20 µL.

Chapter 4

Instrument Qualification

This chapter contains procedures for qualifying the initial and ongoing performance of the Synergy™ HT and the external dispense module (if used).

Overview 62
IQ/OQ/PQ 62
Recommended Qualification Schedule 64
System Test 65
Absorbance Plate Test..... 70
Absorbance Liquid Tests 80
Fluorescence Tests 89
Dispense Module Tests.....102
Dispense Accuracy & Precision Tests Worksheet.....121

Overview

Every Synergy™ HT reader and external dispense module is fully tested at BioTek prior to shipment and they should operate properly upon initial setup. If you suspect that a problem occurred during shipment, if you have received the equipment after returning it to the factory for service, and/or if regulatory requirements dictate that you qualify the equipment on a routine basis, you should perform the procedures outlined in this chapter.

This chapter contains BioTek Instruments' recommended Installation Qualification (IQ), Operational Qualification (OQ), and Performance Qualification (PQ) procedures for all models of the Synergy HT Multi-Mode Microplate Reader.

❖ A **Product Qualification Package** (PN 7090521) for the Synergy HT is available for purchase. The package contains complete procedures for performing Installation Qualification, Operational Qualification, Performance Qualification, and Preventive Maintenance procedures. Microsoft® Excel spreadsheets are provided for performing the calculations, and checklists, data sheets, and logbooks are provided for recording results. Contact your local BioTek dealer for more information.

IQ/OQ/PQ

Installation Qualification confirms that the reader and its components have been supplied as ordered and ensures that they are assembled and configured properly for your lab environment.

- The recommended IQ procedure consists of setting up the instrument and its components as described in ***Chapter 2***, ***Installation*** and performing the System Test. For models with injectors, a quick "Injector Test" is also performed, to ensure that the dispense module is properly installed and there are no leaks.
- The IQ procedure should be performed *initially* (before the reader is used for the first time).
- The successful completion of the IQ procedure verifies that the instrument is installed correctly. The Operational Qualification procedure should be performed immediately following the successful IQ (see next page).

Operational Qualification confirms that the equipment operates according to specification initially and over time.

- The recommended OQ procedure consists of performing the System Test, Absorbance Plate Test, a series of Liquid Tests, and, if the external dispense module is used, the Dispense Accuracy and Precision Tests.
- Your facility's operating policies may also require that you perform an actual assay prior to accepting the reader for routine use. If this is the case, you should not use the data obtained from the first assay run on the reader until you have confirmed that the package insert criteria have been met.
- The OQ procedure should be performed *initially* (before first use) and then routinely; the recommended interval is *annually*. It should also be performed after any major repair or upgrade to the hardware or software.
- Although out-of-tolerance failures will be detected by the OQ tests, results should be compared with those from the routine Performance Qualification tests and previous OQ tests to monitor for trends.
- The successful completion of the OQ procedure, in combination with results that are comparable to previous PQ and OQ tests, confirms that the equipment is operating according to specification initially and over time.

Performance Qualification confirms that the reader consistently meets the requirements of the tests performed at your laboratory.

- The recommended PQ procedure consists of performing the System Test, Absorbance Plate Test, a series of Liquid Tests, and, if the external dispense module is used, the Dispense Accuracy and Precision Tests.
- Your facility's operating policies may also require that you routinely perform an actual assay, to confirm that the reader will consistently give adequate results for the assays to be run on it.
- These tests should be performed routinely; the recommended interval is *monthly* or *quarterly*, depending on the test. This frequency may be adjusted depending on the trends observed over time.
- The successful completion of the PQ procedure confirms that the equipment is performing consistently under normal operating conditions.

Recommended Qualification Schedule

The following schedule defines the factory-recommended intervals for qualifying a Synergy™ HT used two to five days a week. The schedule assumes the reader is properly maintained as outlined in ***Chapter 5, Preventive Maintenance***.

Tests	IQ	OQ	PQ	
	Initially	Initially/ Annually	Monthly	Quarterly
System Test	✓	✓	✓	
Absorbance Tests				
Absorbance Plate Test		✓	✓	
Liquid Test 1 or Liquid Test 2*		✓		✓
Liquid Test 3**		✓		✓
Fluorescence Tests				
Corners Test		✓	✓	
Sensitivity/Linearity Tests		✓	✓	
Tests for Injector Models				
Injector System Test	✓			
Dispense Accuracy and Precision Tests		✓		✓

* Regarding Liquid Tests 1 and 2:

- If you have an Absorbance Test Plate, run Liquid Test 1.
- If you do not have an Absorbance Test Plate, run Liquid Test 2.

** Liquid Test 3 is optional; it is provided for sites requiring verification at wavelengths lower than those attainable with the Absorbance Test Plate.

Important! The risk factors associated with your assays may require that the Operational and Performance Qualification procedures be performed more frequently than shown above.

System Test

Description

The System Test begins with a check of the stepper motor-driven transmission axes within the instrument; each is sequentially homed and verified. The two measurement systems (Absorbance and Fluorescence) are checked for noise and signal levels. The incubation system is monitored to make sure all zones have thermistor readings within expected ranges. The analog power supply levels are measured to make sure all are within expected limits. A configuration data area in memory is tested to make sure all of the calibration information is present and checksums correctly.

If any area tests outside of programmed limits, the reader will "beep" and the failure will be indicated on the test report (generated via Gen5™ or KC4™). The report also contains the reader's serial number and the part number and version number of the basecode software. When the instrument is turned on the System Test automatically runs, but no report is generated. To run the test and generate a report, you must use Gen5 or KC4.

The absorbance measurement system is checked using the six wavelengths specified in the reader's internal absorbance wavelength table. Before running the test, set these wavelengths to the ones you most frequently use (if they are not already set). To view/modify the wavelength table via Gen5/KC4, see the instructions in the ***Getting Started*** chapter.

❖ **Note**: The System Test runs automatically when the instrument is turned on. If this "power-up" System Test fails, the instrument will "beep" repeatedly. If this happens, press the carrier eject button to stop the beeping and then initiate a System Test through Gen5 or KC4 to retrieve the error code.

Procedure

To run the System Test:

1. Turn on the reader and launch Gen5™ or KC4™.
2. If necessary, set Gen5's or KC4's wavelength table to the six wavelengths you most frequently use. See the ***Getting Started*** chapter for instructions.
3. If your assays use incubation, we recommend enabling Temperature Control and allowing the incubator to reach its set point before running the System Test. To access this feature, select **System|Reader Control** and click the **Pre-Heating** tab.
4. **Gen5:** Select **System|Diagnostics|Run System Test**.

   KC4: Select **System|Diagnostics|Run Optics Test**.
   When the **Run Optics Test** dialog appears, click **Start**.

> ❖ If the test fails during execution, a message box will appear in the software. Close the box; the test report will contain the error code that was generated by the failure.

5. When the test is complete, a dialog will appear, requesting additional information. Enter the information (if desired) and then click **OK**.
6. The test report will appear. Scroll down toward the bottom of the report; it will show either "SYSTEM TEST PASS" or "SYSTEM TEST FAIL *** ERROR (error code) DETECTED."
7. Print the report if desired.
   - A sample test report is shown on the next few pages.
   - Gen5 and KC4 store the results in a database, so the results can be retrieved/printed at any time. We recommend that you print and save the reports to document that the test was performed.
8. **If the test failed**, look up the error code in ***Appendix C, Error Codes*** to determine its cause. If the cause is something you can fix, turn off the reader, fix the problem, and then turn the reader back on and retry the test.

   If the test continues to fail, or if the cause is not something you can fix, contact BioTek's Technical Assistance Center (see page 6 for contact information.)

```
                              Gen5 System Test Report

Reader:                       Synergy  (Serial Number: 128787  )
Basecode:                     P/N 7090202  (v2.24)
Date and Time:                08/08/2008 10:12:58 AM
User:                         Administrator
Company:                      BioTek
Comments:                     System Test run during the IQ

Test Results

Operator ID:_____________________________________________________________

Notes:___________________________________________________________________

                            SYSTEM SELF TEST

7090202  Version 2.23       128787            1111 1110

Bias current offset         -0.9 counts       PASS
Offset voltage              1541 counts       PASS
750V measurement            90.1 counts       PASS
750V noise                    66 counts
500V measurement             4.6 counts
500V noise                     3 counts

Lambda: 200  Gain:  1.80  Resets: 1
Channel:      Ref      1
Air:        14235  39595
Dark:        9869   9889
Delta:       4366  29706

Lambda: 340  Gain:  1.95  Resets: 2
Channel:      Ref      1
Air:        12954  39951
Dark:        9871   9885
Delta:       3083  30066

Lambda: 405  Gain:  1.61  Resets: 2
Channel:      Ref      1
Air:        12755  38902
Dark:        9871   9883
Delta:       2884  29019

Lambda: 550  Gain:  1.63  Resets: 1
Channel:      Ref      1
Air:        12783  39796
Dark:        9869   9887
Delta:       2914  29909

Lambda: 630  Gain:  2.81  Resets: 1
Channel:      Ref      1
Air:        12705  39020
Dark:        9868   9896
Delta:       2837  29124

Lambda: 999  Gain:  4.49  Resets: 1
Channel:      Ref      1
Air:        13084  39360
Dark:        9865   9911
Delta:       3219  29449
```

Figure 30-1: Sample output for the System Test (Sheet 1 of 3).
The format varies depending on the software used.

```
Channel:      Ref      1
Noise Max:   9866   9919
Noise Min:   9865   9918
Delta:          1      1

Voltage Reference:  Lamp    24V    Mtr    Min    Low   High    Max    TR
                    1710   1932   2045   1425   1734   2157   2465   3333

INCUBATOR SELF TEST

Temperature Setpoint:  37.0     Current Average: 37.0      A/D Test: PASS

Zone 1: 37.0   Min: 36.9   Max: 37.0     Range: PASS    Thermistor: PASS
Zone 2: 37.0   Min: 36.9   Max: 37.0     Range: PASS    Thermistor: PASS
Zone 3: 37.0   Min: 36.7   Max: 37.0     Range: PASS    Thermistor: PASS
Zone 4: 36.9   Min: 36.9   Max: 37.0     Range: PASS    Thermistor: PASS

AUTOCAL ANALYSIS

PROBE:          TOP

Upper Left Corner:  x=  9732  y=  360
Lower Left Corner:  x=  9720  y= 5896
Lower Right Corner: x=  1044  y= 5888
Upper Right Corner: x=  1056  y=  356
Delta 1:  9732 - 9720=   +12
Delta 2:  1056 - 1044=   +12
Delta 3:   356 -  360=    -4
Delta 4:  5888 - 5896=    -8

PROBE:          BOTTOM

Upper Left Corner:  x=  9724  y= 1844
Lower Left Corner:  x=  9716  y= 7376
Lower Right Corner: x=  1040  y= 7380
Upper Right Corner: x=  1040  y= 1852
Delta 1:  9724 - 9716=    +8
Delta 2:  1040 - 1040=    +0
Delta 3:  1852 - 1844=    +8
Delta 4:  7380 - 7376=    +4

PROBE:          ABSORB

Upper Left Corner:  x= 11244  y= 1856
Lower Left Corner:  x= 11232  y= 7376
Lower Right Corner: x=  2544  y= 7376
Upper Right Corner: x=  2552  y= 1852
Delta 1: 11244 -11232=   +12
Delta 2:  2552 - 2544=    +8
Delta 3:  1852 - 1856=    -4
Delta 4:  7376 - 7376=    +0

Probe Height:          32.48

Middle Sensor:      y= 11976
Tested:                11972
Delta:                    -4

Back Sensor:        x= 11588  y= 7964
Tested:                11580     7976
Delta:                    -8      +12
```

Figure 30-2: Sample output for the System Test (Sheet 2 of 3).
The format varies depending on the software used.

```
SYSTEM TEST PASS
0000

Reviewed/Approved By: _________________________________   Date: _______________

For Technical Support

In the U.S.:                        In Europe:
  BioTek Instruments, Inc.            BioTek Instruments GmbH
  Tel: 800 242 4685                   Tel: 49 (0) 7136-9680
  Fax: 802 655 3399                   Fax: 49 (0) 7136-968-111

All Others:
  Tel: 802 655 4040
  Fax: 802 655 3399

email: TAC@biotek.com
Product support center: www.biotek.com/service
```

Figure 30-3: Sample output for the System Test (Sheet 3 of 3).
The format varies depending on the software used.

Absorbance Plate Test

Description

This test uses BioTek's **Absorbance Test Plate** (PN 7260522) to confirm the mechanical alignment; optical density accuracy, linearity, and repeatability; and wavelength accuracy of the Synergy™ HT. The Absorbance Plate Test compares the reader's optical density and wavelength measurements to NIST-traceable values.

❖ An alternate method that may be used to determine accuracy, linearity, and repeatability is Liquid Test 2, described on page 83.

The Absorbance Plate Test confirms the following:

- **Mechanical Alignment:** The Test Plate has precisely machined holes in its four corners. The amount of light that shines through these holes is an indication of how well the reader is aligned. A reading of more than 0.015 OD for any of the designated alignment holes indicates that the light is being "clipped" and the reader may be out of alignment.
- **Accuracy/Linearity:** The Test Plate contains neutral-density glass filters of known OD values at several wavelengths. Actual measurements are compared against the expected values provided in the Test Plate's Standards Certificate. Since there are several filters with differing OD values, the accuracy across a range of ODs can be established. Once it is proven that the reader is accurate at these OD values, the reader is also considered to be linear.
- **Repeatability:** This test ensures the reader meets its repeatability specification by reading each neutral-density filter on the Test Plate twice with the filter in the same location.
- **Wavelength Accuracy:** BioTek's Absorbance Test Plate with the part number 7260522 contains a glass filter in position C6. This filter is used to check the wavelength accuracy of the reader. The filter is scanned across a specified wavelength range in 1-nm increments. The wavelength of maximum absorbance is compared to the expected peak wavelength supplied on the Test Plate's certificate.

Test Plate Certificates

To run this test on the Synergy™ HT, you'll need BioTek's **7-Filter Absorbance Test Plate (PN 7260522)**, with its accompanying certificates.

- The Standards Certificate contains standard OD values for the filters at several different wavelengths (see the sample below).
- The Peak Wavelength Certificate contains one or more "Peak Wavelength" values for the glass filter in position C6 on the plate. Each value has a valid test range associated with it. For example, a Peak Wavelength value may be 586 nm with a test range of 580 to 590 nm (or tolerance values of -6/+4).

This test plate can be used for testing the reproducibility, linearity, and alignment of your BioTek autoreader. The following calibration data has been recorded by a N.I.S.T. traceable spectrophotometer.

WAVELENGTH (nm)

Well	405nm	450nm	490nm	550nm	620nm	630nm	690nm	750nm
C1	0.147	0.140	0.135	0.130	0.136	0.136	0.127	0.134
E2	0.618	0.575	[illegible]	[illegible]	[illegible]	[illegible].568	0.485	0.434
G3	1.133	1.052	[illegible]	[illegible]	[illegible]	[illegible].040	0.881	0.783
H6	1.701	1.578	[illegible]	[illegible]	[illegible]	[illegible].560	1.323	1.179
F5	2.279	2.024	1.976	1.956	1.893	1.865	1.537	1.272
D4	2.945	2.604	2.545	2.513	2.437	2.400	1.972	1.632

Set # 2453 **Serial # 161259**

S A M P L E

Figure 31: Sample Standards Certificate, showing OD/Wavelength combinations for each of six locations on the Absorbance Test Plate

Before the Absorbance Plate Test can be performed, the standard OD values and the peak wavelength value(s) must be entered into Gen5™ or KC4™.

Instructions for defining the Test Plate's characteristics and for running the test are provided for both Gen5 and KC4 on the following pages.

Setup: Gen5™

To define the Absorbance Test Plate parameters using Gen5:

❖ **Note:** The Gen5 Reader Diagnostics Utility must be installed.

1. Obtain the **certificates** that came with the Test Plate.
2. Start Gen5 and select **System|Diagnostics|Test Plates|Add/Modify Plates**.
3. Click **Add**. The Absorbance Test Plate dialog will appear.
4. Select the appropriate **Plate Type** and enter the plate's **Serial Number**.
5. Enter the **Last Certification** and **Next Certification** dates from the calibration sticker on the Test Plate.
6. If the wavelength values in the top row of the grid are appropriate for your tests, carefully enter the OD values from the Standards Certificate into the grid. Make sure you enter the correct value for each well/wavelength combination.
   - If you need to change the wavelength values, click the **Wavelength List** button. Click Gen5's Help button for assistance.
7. Select the number of **Peak Wavelength tests** to run (1 to 4), based on the number of peak wavelength values provided on the Peak Wavelength Certificate.
8. Enter the **Expected Peak** value(s) from the 2.4 nm Spectral Bandpass column of the Peak Wavelength Certificate. Select 1–4 Peak Wavelengths in the range that the instrument is typically operated.

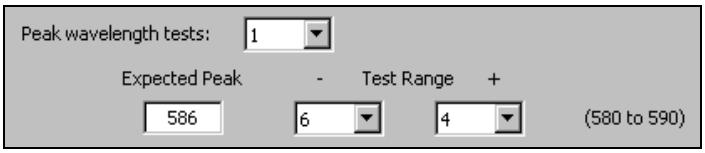

   Note: For certificates that have only one peak wavelength and a fixed wavelength range of 580 to 590 nm, enter the Expected Peak wavelength value and adjust the Test Range values so the range displayed in parentheses is 580 to 590 (as demonstrated above).

9. Review all of the values you entered, and then click **OK** to save the data.

   The information you just entered will be available in Gen5 each time the Absorbance Plate Test is performed.

   The information must be updated whenever the Test Plate is recalibrated.

Procedure: Gen5™

To run the Absorbance Plate Test using Gen5:

1. In Gen5, select **System|Diagnostics|Test Plates|Run**.
2. If prompted, select the desired **Test Plate** and click **OK.**
3. When the Absorbance Test Plate Options dialog appears, check **Perform Peak Wavelength Test** if it is not already checked.
4. Highlight the wavelength(s) to be included in this test.
   - **Note:** You need to select only those wavelengths most appropriate for your use of the reader.
5. (Optional) Enter any **Comments**.
6. Click **Start Test.**
7. Place the Test Plate in the microplate carrier so that well A1 is in the **left rear** corner of the carrier (as you are facing the carrier).
8. Click **OK** to run the test.
9. When the test completes, the results report will appear. Scroll down through the report; every result should show 'PASS'. See page 78 for information on results and troubleshooting tips in the event of failures.
   - A sample test report is shown on pages 76 and 77.
   - Gen5 stores the results in a database; they can be retrieved and printed at any time. We recommend you print and save the report to document that the test was performed.

Setup: KC4™

To define the Absorbance Test Plate parameters using KC4:

1. Obtain the **certificates** that came with the Test Plate.
2. Launch KC4 and select **System|Diagnostics|Define Universal Plates**.

   Note: The terms "Universal Plate" and "Absorbance Plate" are equivalent.
3. Click **Add**. The Edit Universal Plate dialog will appear.
4. Select the appropriate **Plate Type** and enter the plate's **Serial Number**.
5. If the wavelength values in the top row of the grid are appropriate for your tests, carefully enter the standard OD values from the Standards Certificate into the grid. Be sure to enter the correct value for each well/wavelength combination.
   - If you need to change the wavelength values, click the **Wavelength List** button. Click KC4's Help button for assistance.
6. Enter the **Peak Wavelength** value from the Peak Wavelength Certificate.
   - **Note:** If the certificate specifies **multiple** peak wavelength values, you will need to run an independent test using spectral scan reads. KC4 supports the entry of only one Peak Wavelength value, and it must be in the range of 580 to 590 nm. See the special instructions on the next page.
7. Review all of the values you entered, and then click **OK** to save the data.

   The information you just entered will be available in KC4 each time the Absorbance Plate Test is performed.

Procedure: KC4™

To run the Absorbance Plate Test using KC4:

1. Place the Test Plate in the carrier so the well A1 is in the **left rear** corner of the carrier (as you are facing the carrier).
2. In KC4, select **System|Diagnostics|Run Universal Plate Test**.
3. Enter or select the instrument's **Serial Number.**
4. Select the desired **Test Plate.**
5. Check **Peak Absorbance Search.**
   - **Note:** If the Test Plate's Peak Wavelength Certificate specifies **multiple** peak wavelength values, *do not* check 'Peak Absorbance Search'. Run an independent test using spectral scan reads instead; see the special instructions on the next page.

6. Select the Wavelength(s) to be included in this test by clicking in the **Test** column to toggle Yes/No.
   - **Note:** You need to select only those wavelengths most appropriate for your use of the reader.
   - If "N/A" appears for a wavelength you wish to test, update KC4's Wavelengths table to include it (**System|Readers|Filters/ Wavelengths**).
7. Enter or select the **Operator**, and enter any **Comments**.
8. Click **Run Test** to begin.
   - A sample test report is shown on the next two pages.
   - KC4 stores the results in a database, and they can be retrieved and printed at any time. We recommend you print and save the reports to document that the test was performed.

Performing Peak Absorbance Tests Using Spectral Scan Reads

To create and run a KC4 spectral scan protocol to perform an independent Peak Absorbance Test:

Note: Create one protocol per Peak Wavelength value to be tested.

1. Open the **Reading Parameters** dialog and select the **Spectrum** Reading Type and the **Absorbance** Detection Method.
2. Set the **Start** and **Stop** wavelength values to define the test range specified in the Test Plate's Peak Wavelength certificate (e.g., perform the scan from 580 to 590 nm).
3. Set the **Step** (increment) value to **1 nm**.
4. Set the **Plate Type** to **96 WELL PLATE** and read well **C6**.
5. **Save** the protocol.
6. Perform a **read** of the Absorbance Test Plate using this protocol.
7. Locate the peak wavelength on the graph (the wavelength value with the highest OD). Verify that it is within the allowed tolerance; see "Results & Troubleshooting Tips" on page 78.

Absorbance Test Plate Results

Reader:	Synergy (Serial Number: 128787)
Basecode:	P/N 7090202 (v2.24)
Date and Time:	08/08/2008 03:03:36 PM
Absorbance Plate:	7 Filter Test Plate (P/N 7260522) - S/N 161259
Last Plate Certification:	January 2008
Next Plate Certification Due:	January 2009
User:	Administrator
Comments:	Test performed during Initial OQ

Peak Absorbance Results

Well	C6
Reference	586
Tolerance	3
Read	587
Result	PASS

Alignment Results

Wells	A1	A12	H1	H12
Read	0.001	0.002	0.001	0.002
Tolerance	0.015	0.015	0.015	0.015
Result	PASS	PASS	PASS	PASS

Wavelength = 405 nm

Accuracy Results

Wells	C1	E2	G3	H6	F5	D4
Reference	0.147	0.618	1.133	1.701	2.279	2.945
Min Limit	0.124	0.586	1.090	1.647	2.168	2.807
Max Limit	0.170	0.650	1.176	1.755	2.390	3.083
Read 1	0.144	0.615	1.128	1.696	2.284	2.908
Result	PASS	PASS	PASS	PASS	PASS	PASS

Repeatability Results

Wells	C1	E2	G3	H6	F5	D4
Read 1	0.144	0.615	1.128	1.696	2.284	2.908
Min Limit	0.138	0.604	1.112	1.674	2.210	2.816
Max Limit	0.150	0.626	1.144	1.718	2.358	3.000
Read 2	0.144	0.615	1.128	1.695	2.285	2.903
Result	PASS	PASS	PASS	PASS	PASS	PASS

Wavelength = 630 nm

Accuracy Results

Wells	C1	E2	G3	H6	F5	D4
Reference	0.136	0.568	1.040	1.560	1.865	2.400
Min Limit	0.113	0.537	0.999	1.509	1.808	2.284
Max Limit	0.159	0.599	1.081	1.611	1.922	2.516
Read 1	0.134	0.566	1.037	1.557	1.866	2.385
Result	PASS	PASS	PASS	PASS	PASS	PASS

Figure 32-1: Sample output for the Absorbance Plate Test (page 1 of 2). Note: The format varies depending on the software used to run the test.

Repeatability Results

Wells	C1	E2	G3	H6	F5	D4
Read 1	0.134	0.566	1.037	1.557	1.866	2.385
Min Limit	0.128	0.555	1.022	1.536	1.842	2.308
Max Limit	0.140	0.577	1.052	1.578	1.890	2.462
Read 2	0.135	0.566	1.037	1.558	1.867	2.385
Result	PASS	PASS	PASS	PASS	PASS	PASS

Reviewed/Approved By: _____
Date: _____

For Technical Support

In the U.S.:
BioTek Instruments, Inc.
Tel: 800 242 4685
Fax: 802 655 3399

In Europe:
BioTek Instruments GmbH
Tel: 49 (0) 7136-9680
Fax: 49 (0) 7136-968-111

All Others:
Tel: 802 655 4040
Fax: 802 655 3399

email: TAC@biotek.com
Product support center: www.biotek.com/service

Figure 32-2: Sample output for the Absorbance Plate Test (page 2 of 2). Note: The format varies depending on the software used to run the test.

Results & Troubleshooting Tips

The Absorbance Test Plate Report contains results for the following:

- **Peak Absorbance:** When the test is performed, the C6 filter is scanned at the test range(s) defined by the user in the Absorbance Test Plate dialog. To verify wavelength accuracy, the wavelength of the maximum absorbance is compared with the peak wavelength value entered in the software, which comes from the Peak Wavelength Certificate supplied with the Test Plate. The accuracy of the wavelength should be ± 3 nm (± 2 nm instrument, ± 1 nm filter allowance).

  If the reader fails this test, review the following possible problems and solutions:

  - Verify that the Test Plate actually has a filter in location C6. (Test Plates with the part number 9000547 do not have this filter.)
  - Check the C6 filter to make sure it is clean. If needed, clean it with lens paper. **Important!** Do not remove the filter from the Test Plate, and do not use alcohol or other cleaning agents.
  - Make sure the information entered into Gen5™ or KC4™ matches the information on the Test Plate's Peak Wavelength Certificate.
  - Make sure the Test Plate is within its calibration certification period. The calibration sticker is affixed directly to the plate. If it is out of date, contact BioTek to schedule a recertification.
  - Check the microplate carrier to ensure it is clear of debris.

- **Alignment:** This portion of the test measures the alignment of the microplate carrier with the optical path. A reading greater than 0.015 OD represents an out-of-alignment condition. Wells A01, A12, H01, and H12 are the only valid alignment holes for the reader on the PN 7260522 Test Plate.

  If the reader fails this test, review the following possible problems and solutions:

  - Ensure that the Test Plate is correctly seated in the microplate carrier.
  - Check the four alignment holes (A01, A12, H01, H12) to ensure they are clear of debris.
  - Check the microplate carrier to ensure it is clear of debris.

- **Accuracy:** Accuracy is a measure of the optical density of Test Plate wells C01, D04, E02, F05, G03, and H06 as compared with known standard values contained in the Standards Certificate that accompanies each Test Plate.

  If the reader fails this test, review the following possible problems and solutions:

  - Check the neutral-density filters on the Test Plate to ensure they are clean. If necessary, clean them with lens paper. Do not remove the filters from the test plate, and do not use alcohol or other cleaning agents.

- Verify that the filter calibration values entered in Gen5™ or KC4™ are the same as those on the Test Plate's Standards Certificate.
- Verify that the Test Plate is within its calibration certification period. The calibration sticker is affixed directly to the plate. If it is out of date, contact BioTek to schedule a recertification.

- **Repeatability:** Repeatability is a measure of the instrument's ability to read the same well with minimum variation between two reads with the well in the same location.

  If the reader fails this test, review the following possible problems and solutions:

  - Check the neutral-density filters on the Test Plate to ensure there is no debris that may have shifted between readings and caused changes.
  - Check the microplate carrier to ensure it is clear of debris.

Linearity of the optical density readings is confirmed by default if the optical density readings are accurate. To further verify this, perform a regression analysis on the Test Plate OD values in a program such as Microsoft® Excel as follows:

1. Launch Excel.
2. Create a spreadsheet and label one column "Assigned" and the next column "Observed."
3. Enter the **Assigned OD** data for each glass filter in the first column from the Standards Certificate provided with the Test Plate. (Analyze one wavelength at a time.)
4. Enter the **Observed OD** values for the same glass filters in the adjacent column.
5. Under ***Tools,*** select **Data Analysis** and then **Regression**. Define the Assigned values as the "Input Y Range" and the Observed OD as the "Input X Range."

   ❖ **Note:** If the **Data Analysis** command is not available on the **Tools** menu, you may need to install the Analysis ToolPak in Microsoft Excel. Consult Microsoft Excel Help for assistance.

6. Click **OK** and the Summary Output sheet will be displayed. An **R Square** value of at least 0.990 is expected.

Absorbance Liquid Tests

Conducting Liquid Tests confirms the Synergy™ HT's ability to perform to specification with liquid samples. Liquid testing differs from testing with the Absorbance Test Plate in that liquid in the wells has a meniscus, whereas the Test Plate's neutral density glass filters do not. The optics characteristics may differ in these two cases, thus alerting the operator to different types of problems.

- **Liquid Test 1** confirms repeatability and alignment of the reader when a solution is used in the microplate. If these tests pass, then the lens placement and optical system cleanliness are proven.
- **Liquid Test 2** can be used to test the alignment, repeatability, and accuracy of the reader if an Absorbance Test Plate is not available.
- **Liquid Test 3** is provided for sites requiring proof of linearity at wavelengths lower than those attainable with the Absorbance Test Plate. This test is optional because the reader has good "front end" linearity throughout its wavelength range.

For Liquid Tests 1 and 2, the tester is instructed to prepare the stock dye solution described on the next page. The purpose of the formulation is to create a solution that absorbs light at ~2.0 OD full strength when dispensed at 200 µL in a flat-bottom microplate well.

Alternatively, any solution that gives a stable color will suffice. (This includes substrates incubated with an enzyme preparation and then stopped with an acidic or basic solution.) Some enzyme/substrate combinations that may be used as alternates to the described dye are shown below:

Table 1: Typical Enzyme-Substrate Combinations and Stopping Solutions

Enzyme	Substrate	Stopping Solution
Alkaline Phosphate	o-nitrophenyl phosphate	3N sodium hydroxide
beta-Galactosidase	o-nitrophenyl -beta-D galactopyranoside	1M sodium carbonate
Peroxidase	2,2'-Azino di-ethylbenzothiazoline-sulfonic acid (ABTS)	citrate-phosphate buffer, pH 2.8
Peroxidase	o-phenylenediamine	0.03N sulfuric acid

Stock Solution Formulation

The stock solution for Liquid Tests 1 and 2 may be formulated from the ingredients listed below ("A"), or by diluting a dye solution available from BioTek ("B").

> ❖ Either set of instructions should create a solution with an absorbance of about 2.0 when using 200 µL in a flat-bottom microwell. The OD value result will be proportional to the volume in the well and the amount of FD&C No. 5 dye used. You can use a larger or smaller well volume, or add more dye or water to adjust the solution. Note that too small a well volume may result in increased pipetting-related errors.

Solution A

Required Materials:

- Deionized water
- FD&C Yellow No. 5 dye powder (typically 90% pure)
- Tween® 20 (polyoxyethylene (20) sorbitan monolaurate) **or** BioTek wetting agent (PN 7773002)
- Precision balance with capacity of 100 g minimum and readability of 0.001 g
- Weigh boat
- 1-liter volumetric flask

Procedure:

1. Weigh out 0.092 g of FD&C yellow No. 5 dye powder into a weigh boat.
2. Rinse the contents into a 1-liter volumetric flask.
3. Add 0.5 mL of Tween 20, or 5 mL of BioTek's wetting agent.
4. Make up to 1 liter with DI water; cap and shake well.

Solution B

Required Materials:

- BioTek QC Check Solution No. 1 (PN 7120779, 25 mL; or PN 7120782, 125 mL)
- Deionized water
- 5-mL Class A volumetric pipette
- 100-mL volumetric flask

Procedure:

1. Pipette a 5-mL aliquot of BioTek QC Check Solution No. 1 into a 100-mL volumetric flask.
2. Make up to 100 mL with DI water; cap and shake well.

Liquid Test 1

This procedure confirms repeatability and alignment, and will reveal any problems with the reader's optics.

> ❖ A 96-well, flat-bottom microplate is required for this test (Corning Costar® #3590 is recommended). Be sure to use a *new* microplate, because fingerprints or scratches may cause variations in readings.

1. Using freshly prepared stock solution (Solution A or B on the previous page), prepare a 1:2 dilution using deionized water (one part stock, one part deionized water; the resulting solution is a 1:2 dilution).
2. Pipette 200 µL of the **concentrated** solution into the first column of wells in the microplate.
3. Pipette 200 µL of the **diluted** solution into the second column of wells.

> ❖ After pipetting the diluted test solution into the microplate and *before* reading the plate, we strongly recommend **shaking** the plate at Variable speed for four minutes. This will allow any air bubbles in the solution to settle and the meniscus to stabilize. Alternatively, wait 20 minutes after pipetting the diluted test solution before reading the plate.

4. Using Gen5™ or KC4™, read the microplate five times at 405 nm using the Normal read mode, single wavelength, no blanking. Save the data after each read ("Normal" plate position).
5. Without delay, rotate the microplate 180 degrees so that well A1 is in the "H12" position. Read the plate five more times, saving the data after each read. ("Turnaround" plate position.)
6. Print out the ten sets of raw data, or export them to an Excel spreadsheet.

Data Reduction:

7. Calculate the mean value for each physical well location in columns 1 and 2 for the five plates read in the Normal position, and then again for the five plates read in the Turnaround position. This will result in 32 mean values.
8. Perform a mathematical comparison of the mean values for each microwell in its Normal and Turnaround positions (that is, compare A1 to H12, A2 to H11, B1 to G12,… H2 to A11). To pass this test, the differences in the compared mean values must be within the accuracy specification for the instrument.

   Example: If the mean value for well A1 in the Normal position is 1.902 with a specified accuracy of ± 1.0% ± 0.010 OD, then the expected range for the mean of the same well in its Turnaround (H12) position is 1.873 to 1.931 OD.

   1.902 x 0.010 + 0.010 = 0.029; 1.902 - 0.029 = **1.873**; 1.902 + 0.029 = **1.931**

- **Accuracy Specification.** The following accuracy specifications are applied using Normal mode and a 96-well microplate:

  ± 1.0% ± 0.010 OD from 0.000 to 2.000 OD
  ± 3.0% ± 0.010 OD from 2.000 OD to 3.000 OD

Liquid Test 2

The recommended method for testing the instrument's alignment, repeatability, and accuracy is to use the Absorbance Test Plate (see page 70). If the Test Plate is not available, however, Liquid Test 2 can be used for these tests.

Required Materials

- A new 96-well, flat-bottom microplate, such as Corning Costar® #3590
- Ten test tubes, numbered consecutively, set up in a rack
- Calibrated hand pipette (Class A volumetric pipette recommended)
- Stock solution A or B (see page 81)
- A 0.05% solution of deionized water and Tween® 20

Prepare the Dilutions

Refer to the table below and:

- Create a percentage dilution series, beginning with 100% of the original concentrated stock solution (A or B) in the first tube, 90% of the original solution in the second tube, 80% in the third tube, all the way to 10% in the tenth tube.
- Dilute using the 0.05% solution of deionized water and Tween 20.

Table 2: Test Tube Dilutions for Liquid Test 2

Tube Number:	1	2	3	4	5	6	7	8	9	10
Volume of Original Concentrated Solution (mL)	20	18	16	14	12	10	8	6	4	2
Volume of 0.05% Tween Solution (mL)	0	2	4	6	8	10	12	14	16	18
Absorbance expected if original solution is 2.0 at 200 µL	2.0	1.8	1.6	1.4	1.2	1.0	0.8	0.6	0.4	0.2

❖ **Note:** The choice of dilutions and the absorbance of the original solution can be varied. Use **Table 2** as a model for calculating the expected absorbances of a series of dilutions, given a different absorbance of the original solution.

Prepare the Plate

- Pipette 200 µL of the concentrated solution from Tube 1 into each well of the first column, A1 to H1, of a new flat-bottom microplate.
- Pipette 200 µL from each of the remaining tubes into the wells of the corresponding column of the microplate (Tube 2 into wells A2 to H2, Tube 3 into wells A3 to H3, and so on).

Linearity & Repeatability Tests

1. Using Gen5™ or KC4™, read the microplate prepared above five times using Normal mode, dual wavelength at 450/630 nm. Save the data after each read.
   - ➢ Tip: When you create a dual wavelength protocol in KC4, KC4 automatically generates a multi-plate transformation for calculating the delta OD. The name of the resulting data set is 'Delta OD'.

❖ Do not discard the plate; you will use it for the Alignment test.

2. Print out the five sets of **Delta OD** data, or export them to an Excel spreadsheet.

Data Reduction for Linearity:

3. Calculate the mean absorbance for each well, and average the means for each concentration.
4. Perform a regression analysis on the data to determine if there is adequate linearity. For example, using Microsoft® Excel:
   - ➢ In a spreadsheet, create two columns labeled 'X' and 'Y'. Reference **Table 2** on the previous page; enter the **actual** absorbance values in column X, and enter the **expected** absorbance values in column Y.
   - ➢ Select **Tools|Data Analysis|Regression**. Identify column X as the 'Input X Range' and column Y as the 'Input Y Range.'
   - ➢ Click **OK** to perform the analysis, the results of which will be output in a separate sheet.
   - ➢ **Note:** If the Data Analysis command is not available on the Tools menu, you may need to install the Analysis ToolPak in Excel. Consult Excel's help system for assistance.

   Since it is somewhat difficult to achieve high pipetting accuracy when conducting linear dilutions, an **R Square** value of at least 0.99 is considered adequate.

Data Reduction for Repeatability:

5. Calculate the mean and standard deviation for the five readings taken above at each concentration. Only one row of data needs to be analyzed.
6. For each mean below 2.000 OD, calculate the allowed deviation using the repeatability specification for a 96-well plate of ± 1.0% ± 0.005 OD. If above 2.000 OD, apply the ± 3.0% ± 0.005 specification.
7. The standard deviation for each set of readings should be less than the allowed deviation.

   Example: Absorbance readings of 1.950, 1.948, 1.955, 1.952, and 1.950 will result in a mean of 1.951, and a standard deviation of 0.0026. The mean (1.951) multiplied by 1.0% (1.951 x 0.010) = 0.0195, which, when added to the 0.005 (0.0195 + 0.005) = 0.0245 OD, which is the allowable deviation. Since the standard deviation is less than this value, the reader meets the test criteria.

   - **Repeatability Specification:**

     ± 1.0% ± 0.005 OD from 0.000 to 2.000 OD

     ± 3.0% ± 0.005 OD from 2.000 OD to 3.000 OD

Alignment Test

1. Using the plate prepared for the Linearity Test on the previous page, conduct a Turnaround test by reading the plate five times with the A1 well in the H12 position. Save the data after each read.

   This test results in values for the four corner wells that can be used to determine alignment.
2. Calculate the means of the wells A1 and H1 in the Normal plate position (data from Linearity Test) and in the Turnaround position (from Step 1 above).
3. Compare the mean reading for well A1 to its mean reading when in the H12 position. Next, compare the mean values for the H1 well to the same well in the A12 position. The difference in the values for any two corresponding wells should be within the accuracy specification for the instrument.

   Example: If the mean of well A1 in the normal position is 1.902, where the specified accuracy is ± 1.0% ± 0.010 OD, then the expected range for the mean of the same well in the H12 position is 1.873 to 1.931 OD. (1.902 x 1.0% = 0.019 + 0.010 = 0.029, which is added and subtracted from 1.902 for the range.)

   If the four corner wells are within the accuracy range, the reader is in alignment.

Liquid Test 3

This procedure verifies operation of the Synergy™ HT at 340 nm, and is provided for sites requiring proof of linearity at wavelengths lower than those attainable with the Absorbance Test Plate. This test is optional because the reader has good "front end" linearity throughout its wavelength range.

Required Materials

- New 96-well, flat-bottom microplate (Corning Costar® #3590 is recommended)
- Calibrated hand-pipette(s)
- Beakers and graduated cylinder
- Precision balance with readability to 0.01 g
- Buffer Solution below

❖ Read a sample of the buffer solution at 340 nm. This solution should have an optical density of approximately 0.700 to 1.000. This value is not critical, but it should be within this range.

❖ If low, adjust up by adding β-NADH powder until the solution is at least at the lower end of this range. Do not adjust if slightly high.

Buffer Solution (Sigma PBS Solution)

- Deionized water
- Phosphate-Buffered Saline (PBS), pH 7.2–7.6, Sigma® tablets, #P4417 (or equivalent)
- β-NADH Powder (β-Nicotinamide Adenine Dinucleotide, Reduced Form) Sigma® bulk catalog number N 8129, or preweighed 10-mg vials, Sigma number N6785-10VL (or BioTek PN 98233). **Note:** Manufacturer part numbers are subject to change over time.

❖ Store the β-NADH Powder according to the guidelines on its packaging.

1. Prepare a PBS solution from the Sigma tablets.
2. In a beaker, mix 50 mL of the PBS solution with 10 mg of the β-NADH powder and mix thoroughly. This is the **Sigma PBS Solution**.

Procedure

❖ In this procedure, the prepared stock buffer solution B is referred to as the **100% Test Solution**.

1. Carefully prepare a **75% Test Solution** by diluting 15 mL of the **100% Test Solution**:
   - If using the *Sigma PBS Solution*, use 5 mL as the diluent.
2. Carefully prepare a **50% Test Solution** by diluting 10 mL of the **100% Test Solution**:
   - If using the *Sigma PBS Solution*, use 10 mL as the diluent.
3. Carefully pipette the three solutions into a ***new*** 96-well microplate:
   - 150 µL of the **100% Test Solution** into all wells of columns 1 and 2
   - 150 µL of the **75% Test Solution** into all wells of columns 3 and 4
   - 150 µL of the **50% Test Solution** into all wells of column 5 and 6
4. Using Gen5™ or KC4™, read the microplate five times using Normal mode, single wavelength at 340 nm, no blanking. Save the data after each read.
5. Print out the five sets of raw data, or export them to an Excel spreadsheet.

Data Reduction for Repeatability:

6. For each well, calculate the mean and standard deviation of the five readings.
7. For each mean calculated in step 6, calculate the allowed deviation using the repeatability specification for a 96-well plate of ±1.0% ± 0.005 OD (Mean x 0.010 ± 0.005).
8. For each well, compare the standard deviation calculated in step 6 with the allowed deviation calculated in step 7. The standard deviation should be less than the allowed deviation.

   Example: Five readings in well A1 of 0.802, 0.802, 0.799, 0.798, and 0.801 will result in a mean of 0.8004 and a standard deviation of 0.0018. The mean multiplied by 1.0% (0.8004 * 0.010) equals 0.008, and when added to the 0.005 (0.008 + 0.005) equals **0.013**, which is the allowed deviation for well A1. Since the standard deviation for well A1 is less than 0.013, the well meets the test criteria.

   - **Repeatability Specification:**

     ± 1.0% ± 0.005 OD from 0.000 to 2.000 OD
     ± 3.0% ± 0.005 OD from 2.000 OD to 3.000 OD

Data Reduction for Linearity:

9. For each of the three Test Solutions, calculate the mean absorbance for the wells containing that solution (mean of wells A1 to H2, A3 to H4, and A5 to H6).

10. Perform a regression analysis on the data to determine if there is adequate linearity. For example, using Microsoft® Excel:

    - In a spreadsheet, enter the three mean values in ascending order and label the column as the 'Y' values. Enter 0.50, 0.75, and 1.00 and label the column as the 'X' values.
    - Select **Tools|Data Analysis|Regression** to open the Regression dialog. Set "Input Y Range" to reference the above-mentioned Y values, and set "Input X Range" to reference the above-mentioned X values.
    - Click **OK** to perform the analysis, the results of which will be output in a separate sheet.
    - **Note:** If the Data Analysis command is not available on the Tools menu, you may need to install the Analysis ToolPak in Excel. Consult Excel's help system for assistance.

    Since it is somewhat difficult to achieve high pipetting accuracy when conducting linear dilutions, an **R Square** value of at least 0.99 is considered adequate.

Fluorescence Tests

The **Corners Test** uses fluorescent compounds to verify that the plate carrier is properly aligned in relation to the optical probe(s). (Because the Synergy™ HT's fluorescence optics are different from the absorbance optics, the Corners Test is also required.) We recommend running the test for both the top and bottom probes (if equipped).

The **Sensitivity Test** uses fluorescent compounds of varying concentrations to test the fluorescence reading capability of the reader. The ability to detect specific compounds at low concentrations ensures that the filters, optical path, and PMT are all in working order. This test verifies that the difference between the means of wells with known lower limits of concentration of the substance under investigation is statistically distinguishable from the mean of wells with pure diluent.

The **Linearity Test** verifies that the system is linear; that is, signal changes proportionally with changes in concentration. Proving that the system is linear allows the Sensitivity Test to be run on two points instead of using serial dilutions.

Important! The tests presented in this section require specific microplates, solutions, and EX/EM filters. Your laboratory may require a deviation from some of these tests. For example, you may wish to use a different fluorescing solution and/or microplate.

If deviation from the tests as presented in this section is required, the following steps should be taken the first time each test is run (e.g., during the **Initial OQ**):

1. Perform the tests exactly as described on the following pages.
2. Rerun the tests using your particular solutions, filters, microplates, etc. If results are comparable, then the results from these tests will be your baseline for future tests.
3. Be sure to document your new test procedure(s), and save all test results.

Required Materials

- ❖ Microplates should be perfectly clean and free of dust or bottom scratches. Use new microplates from sealed packages.
- ❖ Manufacturer part numbers are subject to change over time.
- ❖ Methylumbelliferone can be used as an alternative or supplemental method for performing these tests for the top probe. See the instructions starting on page 98.

- Buffer:
  - ➢ NIST-traceable Sodium Borate Reference Standard (pH 9.18) (e.g., Fisher-Scientific 1 L Sodium Borate Mfr. #159532, or equivalent), **OR**
  - ➢ Phosphate-Buffered Saline (PBS), pH 7.2-7.6 (e.g., Sigma® tablets, Mfr. #P4417, or equivalent) and pH meter or pH indicator strips with pH range 4 to 10
- Sodium Fluorescein Powder (1 mg vial, BioTek PN 98155)
- Bottom optics: A clean Hellma® Quartz 96-well titration plate (Mfr. #730.009.QG), or equivalent, such as the 96-well glass-bottom Greiner SensoPlate™ (Mfr. #655892).
- Top optics: A new, clean, 96-well solid black microplate, such as Corning® Costar Mfr. #3915. The Hellma Quartz plate described above can also be used.
- Excitation filter 485/20 nm and Emission filter 528/20 nm installed
- Deionized or distilled water
- Various beakers, graduated cylinders, and pipettes
- pH meter or pH indicator strips with pH range 4 to 10
- 95% Ethanol (for cleaning the bottoms of the plates)
- Aluminum foil
- (Optional, but recommended) 0.45 micron filter
- (Optional) Black polyethylene bag(s) to temporarily store plate(s)
- Gen5™ users: **'Synergy HT FI_B.prt'** and **'Synergy HT FI_T.prt'** protocols described on page 95
- KC4™ users: **'Synergy HT FI_B.prt'** and **'Synergy HT FI_T.prt'** protocols described on page 96

Test Solutions

Filter the solutions to remove particulates that could cause erroneous readings. Do not allow dust to settle on the surface of the solution; use plate covers or seals when not reading the plate.

If using BioTek's sodium fluorescein powder (PN 98155), be sure to hold the vial upright and open it carefully; the material may be concentrated at the top. If a centrifuge is available, spin down the tube before opening.

When diluting the sodium fluorescein powder in buffer, it takes time for the powder to completely dissolve. Allow the solution to dissolve for 4 to 5 minutes, with intermittent vortexing, before preparing the titration dyes.

Wrap the vial containing the SF stock solution in foil to prevent exposure to light. Discard the unused solution after seven days.

Discard any open, unused buffer solution after seven days.

1. The **Sodium Borate** solution does not require further preparation; proceed to step 2. If you are using **PBS**, prepare the solution now:
   - (Optional, but recommended) Using a 0.45-micron filter, filter 200 mL of deionized or distilled water.
   - Follow the manufacturer's instructions on the PBS packaging to create 200 mL, dissolving the necessary amount of PBS into the filtered water.
   - Stir the solution (preferably using a stir table) until the PBS is completely dissolved.
   - Check the pH; it should be between 7.2 and 7.6 at 25°C.
2. Prepare the sodium fluorescein stock solution:

   Add **2.0 mL** of the PBS solution to the 1 mg Sodium Fluorescein (SF) vial. This yields a **1.32 nM stock solution**. Ensure that the dye has completely dissolved and is well mixed.
3. Carefully prepare the dilutions. Label each with "SF" and the concentration:

Mix this SF solution:	with buffer:	to make:	
0.53 mL of 1.32 nM stock solution	13.47 mL	50.2 µM	
110 µL of 50.2 µM solution	13.89 mL	400 nM	
3.5 mL of 400 nM solution	10.5 mL	100 nM	
0.46 mL of 100 nM solution	13.54 mL	**3.3 nM**	*Corners Test*
4.24 mL of 3.3 nM solution	9.76 mL	**1 nM**	*Sensitivity/Linearity Tests*

Procedure

1. Create the **Gen5 protocols** (see page 95) or **KC4 protocols** (see page 96).
2. Prepare the **test solutions** (see page 91).
3. Perform the tests using the **Bottom** optics:
   - Pipette the solutions for the Corners, Sensitivity, and Linearity Tests into a clean 96-well quartz or glass-bottom microplate (see the map on page 94).
   - Read the plate using the **'Synergy HT FI_B.prt'** protocol.
4. Perform the tests using the **Top** optics:
   - Pipette the solutions for the Corners, Sensitivity, and Linearity Tests into a new 96-well solid black or quartz microplate (see the map on page 94).
   - Read the plate using the **'Synergy HT FI_T.prt'** protocol.
5. Save and/or print the measurement data.
6. Calculate and analyze the results as described below.

Results Analysis

Corners Test

1. Calculate the Mean of the twelve wells containing the **3.3 nM** SF test solution (A1-A3, A10-A12, H1-H3, H10-H12).
2. Calculate the Standard Deviation of the same twelve wells.
3. Calculate the % CV: (Standard Deviation/Mean) * 100

   The % CV must be **less than 3.0** to pass.

Sensitivity Test

1. Calculate the Mean and Standard Deviation for the buffer wells (C10-F12).
2. Calculate the Mean for the 1000 pM (1.0 nM) SF solution wells (C1-F1).
3. Calculate the Detection Limit, in pg/mL:

   1000 / ((Mean SF - Mean Buffer)/(3 * Standard Deviation Buffer))

Optic Probe	Detection Limit must be less than:
Bottom 5 mm	26 pM (10 pg/mL)
Bottom 3 mm	53 pM (20 pg/mL)
Bottom 1.5 mm	106 pM (40 pg/mL)
Top 3 mm	53 pM (20 pg/mL)
Top 1.5 mm	106 pM (40 pg/mL)*

** Typical performance*

Linearity Test

1. Calculate the Mean of the four wells for each concentration in columns 1-5 (rows C-F only).
2. Perform linear regression using these values as inputs:

x	y
1000	mean of the 1000 pM (1.0 nM) wells
500	mean of the 500 pM (0.5 nM) wells
250	mean of the 250 pM (0.25 nM) wells
125	mean of the 125 pM (0.125 nM) wells
62.5	mean of the 62.5 pM (0.0625 nM) wells

3. Calculate the R-Squared value; it must be **greater than or equal to 0.950** to pass.

Troubleshooting

If any tests fail, please try the suggestions below. If the test(s) continue to fail, print the results and contact BioTek's Technical Assistance Center.

- Are the solutions fresh? The open buffer and stock solutions should be discarded after seven days.
- Are the Excitation/Emission filters clean? Are they in the proper locations and in the proper orientation in the filter wheels?
- Are you using new/clean plates? We suggest you re-run the test with a new/clean microplate. For the bottom optics test, if the base of a plate is touched, clean the entire base with alcohol (95% ethanol) and then wipe with a lint-free cloth. Before placing a plate in the instrument, blow the bottom of the plate with an aerosol. If the test fails again, the optical probe(s) may need to be cleaned. Contact BioTek TAC for instructions.
- If a test fails because one or more wells overranged, reduce the Sensitivity value in the protocol by 1-5 counts and re-read the plate.
- If the Corners Test continues to fail, the hardware may be misaligned. Contact BioTek TAC.
- Review the instructions under "Pipette Map" (page 94 for SF or 100 for MUB) to verify that you correctly prepared the plates.
- Does the Plate Type setting in the protocol match the plate you used?

Pipette Map

❖ Seal the plates with foil or store them in black polyethylene bags until use. If the base of a plate is touched, clean the entire base with alcohol (95% ethanol) and then wipe with a lint-free cloth. Before placing a plate in the instrument, blow the bottom of the plate with an aerosol duster.

For the **Corners** test:

- Pipette 200 µL of the **3.3 nM SF** solution into wells A1-A3, A10-A12, H1-H3, and H10-H12.
- (Optional for plates with black sidewalls) Pipette 200 µL of buffer in the wells surrounding the 3.3 nM wells ('CBUF' in the grid below).

For the **Sensitivity/Linearity** tests:

- Use a multi-channel pipette with just four tips installed.
- Pipette 150 µL of buffer into wells C2-F5 (NOT column 1) and C10-F12.
- Pipette 150 µL of the **1 nM SF** solution into wells C1-F1. Discard the tips.
- Pipette 150 µL of the **1 nM SF** solution into wells C2-F2. Mix the wells using the pipette. Do not discard the tips.
- Aspirate 150 µL from wells C2-F2 and dispense into wells C3-F3. Mix the wells using the pipette. Do not discard the tips.
- Aspirate 150 µL from wells C3-F3 and dispense into wells C4-F4. Mix the wells using the pipette. Do not discard the tips.
- Aspirate 150 µL from wells C4-F4 and dispense into wells C5-F5. Mix the wells using the pipette.
- Aspirate 150 µL from wells C5-F5 and discard.

	1	2	3	4	5	6	7	8	9	10	11	12
A	3.3 nM	3.3 nM	3.3 nM	CBUF					CBUF	3.3 nM	3.3 nM	3.3 nM
B	CBUF	CBUF	CBUF	CBUF					CBUF	CBUF	CBUF	CBUF
C	1.0 nM	0.5 nM	0.25 nM	0.125 nM	0.062 nM					BUF	BUF	BUF
D	1.0 nM	0.5 nM	0.25 nM	0.125 nM	0.062 nM					BUF	BUF	BUF
E	1.0 nM	0.5 nM	0.25 nM	0.125 nM	0.062 nM					BUF	BUF	BUF
F	1.0 nM	0.5 nM	0.25 nM	0.125 nM	0.062 nM					BUF	BUF	BUF
G	CBUF	CBUF	CBUF	CBUF					CBUF	CBUF	CBUF	CBUF
H	3.3 nM	3.3 nM	3.3 nM	CBUF					CBUF	3.3 nM	3.3 nM	3.3 nM

Gen5™ Protocol Reading Parameters

The following tables contain the recommended settings for the Gen5 protocols. Your tests may require modifications to some of these parameters, such as Plate Type or Sensitivity (see "Troubleshooting" on page 93).

❖ The **Plate Type** setting should match the plate you are actually using.

Protocol Name: 'Synergy HT FI_B.prt'	
Parameter	Setting
Plate Type:	"Greiner SensoPlate" (Mfr. #655892)
Read Wells:	Corners Read step: All wells Sensitivity Read step: Wells C1-F12
Filters:	EX 485/20 nm, EM 528/20 nm
Optics Position:	Bottom
Sensitivity:	Corners Read step: 80 Sensitivity/Linearity Read step: 100
Delay After Plate Movement:	350 msec
Measurements Per Data Point:	40

Protocol Name: 'Synergy HT FI_T.prt'	
Parameter	Setting
Plate Type:	"Costar 96 black opaque" (Mfr. #3915)
Read Wells:	Corners Read step: All wells Sensitivity Read step: Wells C1-F12
Filters:	EX 485/20 nm, EM 528/20 nm
Optics Position:	Top
Sensitivity:	Corners Read step: 80 Sensitivity/Linearity Read step: 100
Delay After Plate Movement:	350 msec
Measurements Per Data Point:	40
Top Probe Vertical Offset:	1.00 mm

KC4™ Protocol Reading Parameters

The following tables contain the recommended settings for the KC4 protocols. Your tests may require modifications to some of these parameters, such as Plate Type or Sensitivity (see "Troubleshooting" on page 93).

❖ The **Plate Type** setting should match the plate you are actually using.

Protocol Name: 'Synergy HT FI_B.prt'	
Parameter	Setting
Reading Type:	Endpoint
Detection Method:	Fluorescence
Filters:	2 Filter Sets: EX 485/20 nm, EM 528/20 nm
Optics Position:	Bottom
Sensitivity:	Filter Set 1 (Corners): 80 Filter Set 2 (Sensitivity/Linearity): 100
Nb Samples Per Well:	Both filter sets: 40
Delay Before Sampling:	Both filter sets: 350 msec
Plate Type:	"Greiner SensoPlate" (Mfr. #655892) Note: You may need to add this Plate Format in KC4; see the dimensions on the next page.
Read Wells:	A1-H12

Protocol Name: 'Synergy HT FI_T.prt'	
Parameter	Setting
Reading Type:	Endpoint
Detection Method:	Fluorescence
Filters:	2 Filter Sets: EX 485/20 nm, EM 528/20 nm
Optics Position:	Top
Sensitivity:	Filter Set 1 (Corners): 80 Filter Set 2 (Sensitivity/Linearity): 100
Nb Samples Per Well:	Both filter sets: 40
Delay Before Sampling:	Both filter sets: 350 msec
Plate Type:	"Costar 96 black opaque" (Mfr. #3915)
Read Wells:	A1-H12
Top Probe Vertical Offset:	1.00 mm

Plate Format Dimensions

To create a plate format in KC4™ for the Greiner SensoPlate, select **System > Plate Formats**, click **New**, and add the information shown below:

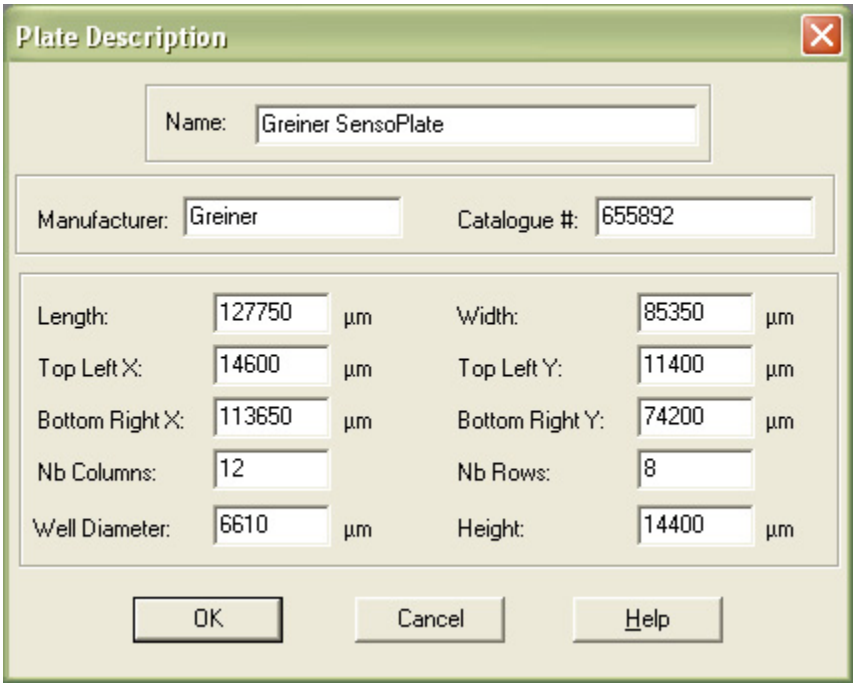

Once the plate format is created, you can reference it in a protocol's Reading Parameters dialog.

Fluorescence Tests Using Methylumbelliferone

As an alternative to using Sodium Fluorescein, Methylumbelliferone ("MUB") can be used to test the **top optics** for the fluorescence system.

Required Materials

- A new, clean, 96-well solid black plate, such as Corning® Costar Mfr. #3915
- Excitation filter 360/40 nm, Emission filter 460/40 nm
- Deionized or distilled water
- Carbonate-Bicarbonate buffer ("CBB") capsules (BioTek PN 98158)
- 10 mg vial of Methylumbelliferone (MUB) (BioTek PN 98156)
- 100% methanol (BioTek PN 98161)
- Aluminum foil
- Various beakers, graduated cylinders, and pipettes
- (Optional, but recommended) 0.45 micron filter
- Gen5™ or KC4™ **'Synergy HT FI_MUB.prt'** protocol described on page 101

Test Solutions

1. Prepare the buffer (CBB) solution:
   - (Optional, but recommended) Using a 0.45-micron filter, filter 200 mL of deionized or distilled water.
   - Open and dissolve the contents of 2 CBB capsules (do not dissolve the outer gelatin capsule) into 200 mL of the water.
   - Stir the solution (preferably using a stir table) until the CBB is completely dissolved.
2. Prepare the MUB stock solution:
   - Add 1 mL of 100% methanol to the 10 mg vial of MUB.
   - Make sure all of the dye has completely dissolved and is well mixed. This yields a **10 mg/mL** stock solution.
   - Wrap the solution in aluminum foil to prevent exposure to light.

3. Prepare the dilutions. Label each with "MUB" and the concentration.

Mix this MUB solution:	with:	to make:
0.5 mL of 10 mg/mL stock solution	4.5 mL of 100% methanol	1 mg/mL
0.88 mL of 1 mg/mL solution	4.12 mL of CBB	176 µg/mL
0.1 mL of 176 µg/mL solution	9.9 mL of CBB	1.76 µg/mL
0.5 mL of 1.76 µg/mL solution	4.5 mL of CBB	176 ng/mL
1 mL of 176 ng/mL solution	9 mL of CBB	**17.6 ng/mL (100 nM)**

Procedure

1. Create the Gen5 or KC4 protocol (see page 101).
2. If you have not already done so, prepare the **test solutions** (see page 98).
3. Refer to the **Pipette Map** on page 100 and pipette the solutions into a clean, 96-well solid black plate.
4. Read the plate using the **'Synergy HT FI_MUB.prt'** protocol.
5. Save and/or print the measurement data.
6. Calculate and analyze the results as described below.

Results Analysis

Sensitivity Test

1. Calculate the Mean and Standard Deviation for the buffer wells (C10-F12).
2. Calculate the Mean for the **17.6 ng/mL** (100 nM) MUB solution wells (C1-F1).
3. Calculate the Detection Limit, in ng/mL:

   17.6 / ((Mean MUB - Mean Buffer)/(3 * Standard Deviation Buffer))

Optic Probe	Detection Limit must be less than:
Top 3 mm	0.16 ng/mL
Top 1.5 mm	0.31 ng/mL

Linearity Test

1. Calculate the Mean of the four wells for each concentration in columns 1-5.
2. Perform linear regression using these values as inputs:

x	y
100	mean of the 100 nM wells
50	mean of the 50 nM wells
25	mean of the 25 nM wells
12.5	mean of the 12.5 nM wells
6.25	mean of the 6.25 nM wells

3. Calculate the R-Squared value; it must be greater than or equal to **0.950** to pass.

Pipette Map

❖ Seal the plate with foil or store it in a black polyethylene bag until use.

Use a multi-channel pipette with just 4 tips installed. Perform these instructions carefully, and refer to the grid below.

- Pipette 150 µL of CBB buffer into wells C2-F5 and C10-F12.
- Pipette 150 µL of the **17.6 ng/mL** (100 nM) MUB solution into wells C1-F1. Discard the tips.
- Pipette 150 µL of the **17.6 ng/mL** solution into wells C2-F2. Mix the wells using the pipette. Do not discard the tips.
- Aspirate 150 µL from wells C2-F2 and dispense it into wells C3-F3. Mix the wells using the pipette. Do not discard the tips.
- Aspirate 150 µL from wells C3-F3 and dispense it into wells C4-F4. Mix the wells using the pipette. Do not discard the tips.
- Aspirate 150 µL from wells C4-F4 and dispense it into wells C5-F5. Mix the wells using the pipette.
- Aspirate 150 µL from wells C5-F5 and discard.

	1	2	3	4	5	6	7	8	9	10	11	12
A												
B												
C	100 nM	50 nM	25 nM	12.5 nM	6.25 nM					BUF	BUF	BUF
D	100 nM	50 nM	25 nM	12.5 nM	6.25 nM					BUF	BUF	BUF
E	100 nM	50 nM	25 nM	12.5 nM	6.25 nM					BUF	BUF	BUF
F	100 nM	50 nM	25 nM	12.5 nM	6.25 nM					BUF	BUF	BUF
G												
H												

Protocol Reading Parameters

❖ Your tests may require modifications to some of the parameters below, such as Plate Type or Sensitivity (see "Troubleshooting" on page 93). The **Plate Type** setting should match the plate you are actually using.

The following tables contains the recommended settings for the 'Synergy HT FI_MUB.prt' protocol.

GEN5 USERS	**Protocol Name: 'Synergy HT FI_MUB.prt'**
Parameter	Setting
Plate Type:	"Costar 96 black opaque" (#3915)
Read Wells:	Wells C1 to F12
Detection Method:	Fluorescence
Read Type:	Endpoint
Filters:	EX 360/40 nm, EM 460/40 nm
Optics Position:	Top
Sensitivity:	90
Delay After Plate Movement:	350 msec
Measurements Per Data Point:	40
Top Probe Vertical Offset:	1.00 mm

KC4 USERS	**Protocol Name: 'Synergy HT FI_MUB.prt'**
Parameter	Setting
Reading Type:	Endpoint
Detection Method:	Fluorescence
Filters:	1 Filter Set: EX 360/40 nm, EM 460/40 nm
Optics Position:	Top
Sensitivity:	90
Nb Samples Per Well:	40
Delay Before Sampling:	350 msec
Plate Type:	"Costar 96 black opaque" (#3915)
Read Wells:	C1-F12
Top Probe Vertical Offset:	1.00 mm

Dispense Module Tests

This section applies to Synergy™ HT models with injectors only.

BioTek Instruments, Inc. has developed a set of tests that you can perform to ensure that the dispense module performs to specification initially and over time. We recommend that you perform these tests before first use (e.g., during the Initial OQ), and then every three months.

- The **Accuracy Test** is a measure of the mean volume per well for multiple dispenses. The actual weight of the dispensed fluid is compared to the expected weight and must be within a certain percentage to pass. Pass/Fail criteria depends on the per-well volume dispensed: 2.0% for 80 µL, 5.0% for 20 µL, and 20.0% for 5 µL. It is assumed that one gram is equal to one milliliter.

  The test uses a single green dye test solution and one 96-well microplate (per injector) to test the three different volumes. The balance is tared with the empty plate, and then the 80 µL dispense is performed for columns 1–4. The fluid is weighed and the balance is tared again (with the plate on the balance). This process is repeated for the 20 µL and 5 µL dispenses. It is assumed that the solutions used are at room temperature. A precision balance (3 place) is used to weigh the plate.

- The **Precision Test** is a measure of the variation among volumes dispensed to multiple wells. For each volume dispensed (80 µL, 20 µL, and 5 µL) to four columns, the %CV (coefficient of variation) of 32 absorbance readings is calculated. Pass/Fail criteria depends on the per-well volume dispensed: 2.0% for 80 µL, 7.0% for 20 µL, and 10.0% for 5 µL. The plate is read in an absorbance reader at 405/750 nm for columns 1–4 and at 630/750 nm for columns 5–12.

The two tests are performed simultaneously and use the same plate. Data reduction can be performed automatically or manually, depending on the test setup.

Required Materials

- Absorbance reader with 405, 630, and 750 nm filters. The reader must have an accuracy specification of ± 1.0% ± 0.010 OD or better and a repeatability specification of ± 1.0% ± 0.005 OD or better.

  ❖ **Note:** The Synergy HT reader may be used if it has passed the *Absorbance Plate Test* and the *Absorbance Liquid Tests* described earlier in this chapter.

- Shaker (if the absorbance reader does not support shaking)
- Precision balance with capacity of 100 g minimum and readability of 0.001 g
- 50–200 µl hand pipette and disposable tips
- Deionized water
- Supply bottles
- 250 mL beaker
- New 96-well, flat-bottom microplates
- BioTek's Green Test Dye Solution (PN 7773003) undiluted, **or** one of the alternate test solutions provided on the next page
- 100 mL graduated cylinder and 10 mL pipettes (if not using BioTek's Green Test Dye Solution)
- Gen5™ **or** KC4™ software installed on the host PC
- Calculation worksheet on the last page of this chapter

Test Solution Recipes

❖ 80 µL of test solution with 150 µL of deionized water should read between 1.300 and 1.700 OD at 405/750 nm. It is assumed that the solutions used are at room temperature.

If you do not have BioTek's Green Test Dye Solution (PN 7773003), prepare a green test dye solution using one of the following methods:

Using BioTek's Blue and Yellow Concentrate Dye Solutions:

Ingredient	Quantity
Concentrate Blue Dye Solution (PN 7773001, 125 mL)	4.0 mL
QC (Yellow) Solution (PN 7120782, 125 mL)	5.0 mL
Deionized water	90.0 mL

Using FD&C Blue and Yellow Dye Powder:

Ingredient	Quantity per Liter
FD&C Blue No. 1	0.200 grams
FD&C Yellow No. 5	0.092 grams
Tween 20®	1.0 mL
Sodium Azide N_3Na	0.100 gram
Deionized water	Make to 1 liter

Test Setup: Gen5™

To perform the Dispense Accuracy and Precision Test using Gen5, you'll need to create two **protocols** containing the necessary Dispense and Read steps (one protocol per dispenser). You can create these protocols once and then reference them in new **experiments** each time you run the test. See page 110 for instructions for creating these protocols.

- For your convenience, we've included a worksheet at the end of this chapter for recording the dispense weights, Delta OD values, calculations, and pass/fail. Make two copies of this worksheet—one for each dispenser tested.
- *Tip*: You can take advantage of Gen5's Power Export feature to create Microsoft Excel spreadsheets for performing the Results Analysis calculations. See the Gen5 Help System for information on the Power Export Builder.

Test Setup: KC4™

- Using KC4, create three **Dispense** protocols for the Synergy HT. If you are using a BioTek absorbance reader, create two additional **Read** protocols. See page 115 for instructions.
- If you are not using a BioTek absorbance reader, prepare your reader to perform two reads with the following characteristics:

	80 µl Read	**20 & 5 µl Read**
Primary Wavelength	405 nm	630 nm
Reference Wavelength	750 nm	750 nm
Plate Columns	1-4	5-12

- For your convenience, we've included a worksheet at the end of this chapter for recording the dispense weights, Delta OD values, calculations, and pass/fail. Make two copies of this worksheet—one for each dispenser tested.
- *Tip*: You can take advantage of KC4's PowerReports feature to create Microsoft Excel spreadsheets for performing the Results Analysis calculations. See KC4's User Guide for information on PowerReports.

Test Procedure: Gen5™

1. **Prime** both dispensers with deionized or distilled water.
   - Ensure that the tip priming trough (BioTek PN 7082118) is installed in the microplate carrier.
   - Place a clean priming plate (BioTek PN 7132158 or 7092135) on the carrier.
   - Fill a supply bottle with deionized or distilled water and insert the inlet tube.
   - In Gen5, select **System > Reader Control**. If prompted, select the reader under test.
   - Click the **Dispenser** tab. Select Dispenser **1** or **2**. If the 'Initialized' status is "No" click Initialize.
   - Enter a prime **Volume** of 4000 µL and click **Prime**.
   - When finished remove the priming plate, empty it, and put it back on the carrier.
2. **Remove** the inlet tubes from the supply bottles. **Prime** both dispensers with the Volume set to 2000 µL. This prevents the water from diluting the dye.
3. Fill a beaker with at least 20 mL of the **green dye solution**. Prime both dispensers with 2000 µL of the solution. When finished, remove the priming plate from the carrier.
4. Create a new **experiment** based on the **Synergy HT Dispense 1.prt** file described on page 110.
5. Place a new 96-well microplate on the balance and tare the balance.
6. Place the plate on the microplate carrier.

> ❖ **Important:** Gen5 will provide prompts and instructions for processing the plates; follow the steps carefully. When each dispense step is finished, you will weigh the plate, record the weight, tare the balance with the plate on it, and then place the plate back on the carrier for the next step.

7. Select **Plate|Read** and click **READ**. Gen5 will prompt you to empty the tip priming trough.
8. When ready, click **OK** at the Load Plate dialog to begin the experiment. Follow the prompts displayed on the screen; the sequence is as follows:
   - Dispense 80 µL/well to columns 1–4.
   - Remove the plate and weigh it. Record the weight and tare the balance.
   - Place the plate on the carrier, dispense 20 µL/well to columns 5–8.
   - Remove the plate and weigh it. Record the weight and tare the balance.
   - Place the plate on the carrier, dispense 5 µL/well to columns 9–12.

- Remove the plate and weigh it. Record the weight.
- **Manually pipette 150 µL** of deionized or distilled water into all 12 columns, on top of the green test dye solution.
- Place the plate on the carrier for a 15-second shake, the '80 µL' read at 405/750 nm, and the '20 and 5 µL' read at 630/750 nm.

9. When processing is complete, select **File|Save As** and save the experiment using an identifying file name.
10. Repeat steps 4–9 using the **Synergy HT Dispenser 2.prt** protocol.
11. See page 109 for instructions for analyzing the results.
12. When all tests are complete, prime both dispensers with at least 5000 µL of deionized or distilled water, to flush out the green dye solution.

Test Procedure: KC4™

❖ Note: If you are using one of BioTek's keypad-based readers, such as the ELx800™ or ELx808™, make sure the reader is **not** running in Rapid mode. To check the setting, select UTIL → READ and cycle through the options until READ IN RAPID MODE? appears. Set it to NO.

❖ Perform the following set of steps **two times**, to test both dispensers.

1. Using KC4, prime the fluid lines with deionized water:
   - Fill a reagent bottle with deionized water and insert the inlet tube.
   - Select **System|Reader Control** and click the **Dispenser** tab. Set the Dispenser number (1 or 2), enter a **Volume** of 4000 µL, and click **Prime**. Place the priming plate on the carrier and click **OK**.
   - Remove the inlet tube from the bottle and run another prime with the volume set to 2000 µL. Empty the plate and replace it on the carrier.
2. Fill a reagent bottle or beaker with 20 mL of the green dye solution. Prime the fluid lines with 2000 µl of the green dye. Remove and empty the priming plate.

❖ Perform these steps carefully. When each dispense protocol is finished, you will weigh the plate, record the weight, and tare the balance.

3. Place a new 96-well microplate on the balance and tare the balance.
4. Place the plate on the carrier and run the **80 µl Dispense** protocol created for the dispenser under test.
5. Weigh the plate. Record the 80 µL dispense weight, and then tare the balance.
6. Place the plate on the carrier and run the **20 µl Dispense** protocol created for the dispenser under test.
7. Weigh the plate. Record the 20 µL dispense weight, and then tare the balance.
8. Place the plate on the carrier and run the **5 µl Dispense** protocol created for the dispenser under test.
9. Weigh the plate. Record the 5 µL dispense weight.
10. Pipette or dispense **150 µL** of deionized water into each well, on top of the green dye solution.
11. If the reader does not support shaking, shake the plate in an orbital shaker for about 15 seconds.
12. Transfer the plate to the absorbance reader and run the two Read protocols as described under ***Test Setup—KC4*** on page 105. Save each Data file using an identifying file name (**Data|Save As**).
13. When all tests are complete, prime both dispensers with at least 5000 µL of deionized water to flush out the green dye solution.

Results Analysis

❖ For your convenience, we've included a **worksheet** at the end of this chapter for recording the dispense weights, Delta OD values, calculations, and pass/fail. Make two copies of this worksheet—one for each dispenser tested.

The pass/fail criteria for each set of 32 wells with the same dispense volume is based on the calculated coefficient of variation (%CV) and Accuracy % Error.

- If you created the Gen5™ protocols as described on pages 110–113, the %CVs are calculated automatically. With the experiment open, click the **Statistics** button and set the Well Type to **Assay Control**. Use the Data drop-down box to select each Delta OD data set.
- If you created the KC4™ **Read** protocols as described on page 117, the %CV is calculated automatically. With the Data file open, select the **Delta OD** data set and click the **Statistics** button.

For each volume dispensed (80, 20, 5 µL), for each dispenser (1, 2):

- Calculate the **Standard Deviation** of the 32 wells
- Calculate the **Mean** of the 32 wells
- Calculate the **%CV**: (Standard Deviation / Mean) x 100
- Calculate the **Accuracy % Error**:
  ((Actual Weight – Expected Weight) / Expected Weight) * 100

❖ **Expected Weights** for 32 wells: 80 µl (2.560 g), 20 µl (0.640 g), 5 µl (0.160 g). It is assumed that one gram is equal to one milliliter.

Dispense Volume	To pass, % CV must be:	To pass, Accuracy % Error must be:
80 µl	≤ 2.0%	≤ 2.0%
20 µl	≤ 7.0%	≤ 5.0%
5 µl	≤ 10.0%	≤ 20.0%

Failures

If any tests fail, prime the fluid lines and rerun the test(s). If the test(s) fail again, the injector heads may require cleaning (see ***Chapter 5, Preventive Maintenance***).

If tests continue to fail, contact BioTek's Technical Assistance Center.

Creating the Test Protocols Using Gen5™

This section contains instructions for creating two Gen5 protocols specifically for performing the Synergy HT Dispense Precision and Accuracy test. Refer to the **Gen5 Help system** to learn more about using Gen5, and for complete instructions for creating protocols.

To create the protocols in Gen5:

1. Start by selecting **System|Reader Configuration**, and add/configure the **Synergy** (if it is not already there).
2. Select **File|New Protocol**. A "menu tree" will appear.
   - To edit a protocol category, double-click its "branch" in the tree, as shown below:

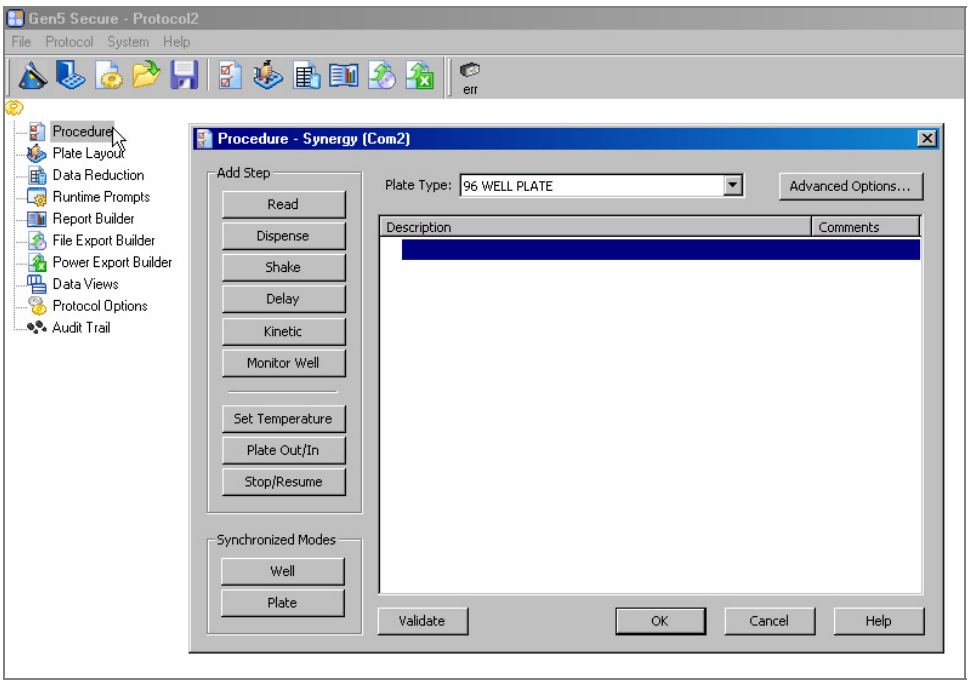

Figure 33: Editing the Procedure in a new Protocol

3. Perform the steps in the following three sections to define the **Procedure**, customize the **Plate Layout**, and add **Data Reduction** steps, to test Dispenser #1.
4. When you're finished, select **File|Save As** and give the protocol an identifying file name, such as "Synergy HT Dispenser 1.prt."
5. Repeat steps 2–4 to create a protocol to test Dispenser #2.

Define the Procedure

In brief, the protocol's **procedure** follows the sequence below. After each Dispense step, the plate is ejected to allow the operator to weigh it and then tare the balance.

- Dispense 80 µL dye to columns 1–4
- Dispense 20 µL dye to columns 5–8
- Dispense 5 µL dye to columns 9–12
- Shake the plate for 15 seconds
- Read columns 1–4 at 405/750 nm, calculate the Delta OD
- Read columns 5–12 at 630/750 nm, calculate the Delta OD

The detailed procedure is described on the next page. To add a step to the procedure, click the appropriate button on the left side of the Procedure dialog (see ***Figure 33*** on page 110) and define the required parameters.

❖ The **comments** suggested for use with the **Plate Out/In** steps are *optional*, but they may be useful for the person running the test. When the Plate Out/In step is executed, Gen5 displays its comment in a message box, as demonstrated below:

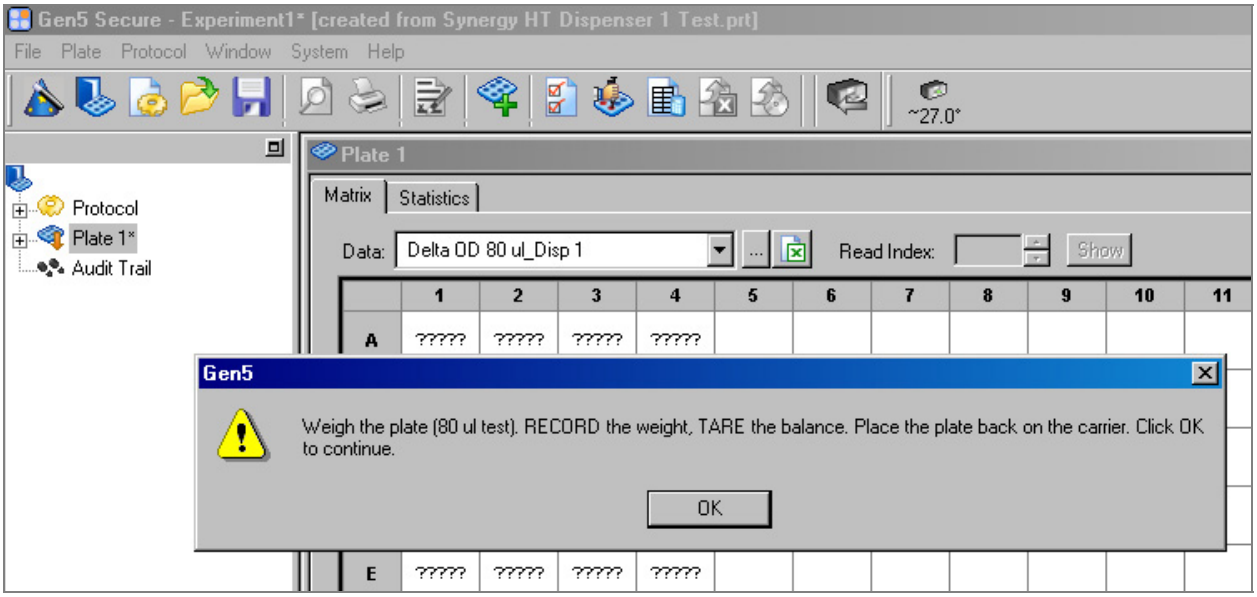

Figure 34: Sample comment associated with a Plate Out/In step, presented to the operator at the start of the experiment.

Gen5™ Procedure Steps		
#	**Step Type**	**Details**
1	Dispense	Dispenser <select 1 or 2, depending on the protocol> Dispense to wells A1..H4 Dispense 80 µL at rate 275 µL/sec
2	Plate Out,In	Suggested comment: *Weigh the plate (80 ul test). RECORD the weight, TARE the balance. Place the plate back on the carrier. Click OK to continue.*
3	Dispense	Dispenser <select 1 or 2, depending on the protocol> Dispense to wells A5..H8 Tip prime before this dispense step, 20 µL Dispense 20 µL at rate 250 µL/sec
4	Plate Out,In	Suggested comment: *Weigh the plate (20 ul test). RECORD the weight, TARE the balance. Place the plate back on the carrier. Click OK to continue.*
5	Dispense	Dispenser <select 1 or 2, depending on the protocol> Dispense to wells A9..H12 Tip prime before this dispense step, 5 µL Dispense 5 µL at rate 225 µL/sec
6	Plate Out,In	Suggested comment: *Weigh the plate (5 ul test). RECORD the weight. PIPETTE 150 ul/well of DI water into all 12 columns. Place the plate back on the carrier. Click OK to perform the Read steps.*
7	Shake	Medium intensity for 15 seconds
8	Read	Step label: "80 ul Read_Disp 1" (or _Disp 2) Wells: A1..H4 Detection Method: Absorbance Read Type: Endpoint Read Speed: Normal Two Wavelengths: 405 and 750 nm
9	Read	Step label: "20 and 5 ul Read_Disp 1" (or _Disp 2) Wells: A5..H12 Detection Method: Absorbance Read Type: Endpoint Read Speed: Normal Two Wavelengths: 630 and 750 nm

Customize the Plate Layout (Optional)

The results analysis worksheet at the end of this chapter requires the calculation of the Standard Deviation, Mean, and % CV of the ODs read for each dispense volume in each plate (six sets of calculations). By identifying the wells by their dispense volumes in the Plate Layout, Gen5 will calculate these values for you.

1. In the protocol, open the **Plate Layout** dialog.
2. Set the **Type** set to **Assay Control.**
3. Click the **Browse** (…) button associated with the **ID** field. Assign the first three controls as **Disp_80**, **Disp_20**, and **Disp_5**. Click **OK**.
4. Set ID to **Disp_80** and highlight wells **A1** to **H4**.
5. Set ID to **Disp_20** and highlight wells **A5** to **H8**.
6. Set ID to **Disp_5** and highlight wells **A9** to **H12**.
7. Click **OK** to save the changes and close the dialog.

❖ *Tip*: After running the experiment, view the **Statistics** for each **Delta OD Data Set** to view the calculations.

Add Data Reduction Steps

Each Read step is performed using two wavelengths, so you'll need to create two data reduction steps to calculate the Delta OD values.

1. In the protocol, open the **Data Reduction** dialog and click the **Transformation** button.
2. Click the **Select Multiple Data Sets** button and then click the **DS2** radio button (see below).
3. Set the **Data In** for **DS1** to the **80** µL Read step at **405** nm.
4. Set the **Data In** for **DS2** to the **80** µL Read step at **750** nm.
5. Click **OK** to return to the Transformation dialog.
6. In the **New Data Set Name** field, type an identifying name such as 'Delta OD 80 ul_Disp 1' (see sample screen on the next page).
7. Clear **Use single formula for all wells.**
8. In the **Current Formula** field, type **DS1-DS2** and then highlight wells **A1** to **H4** to assign the formula.

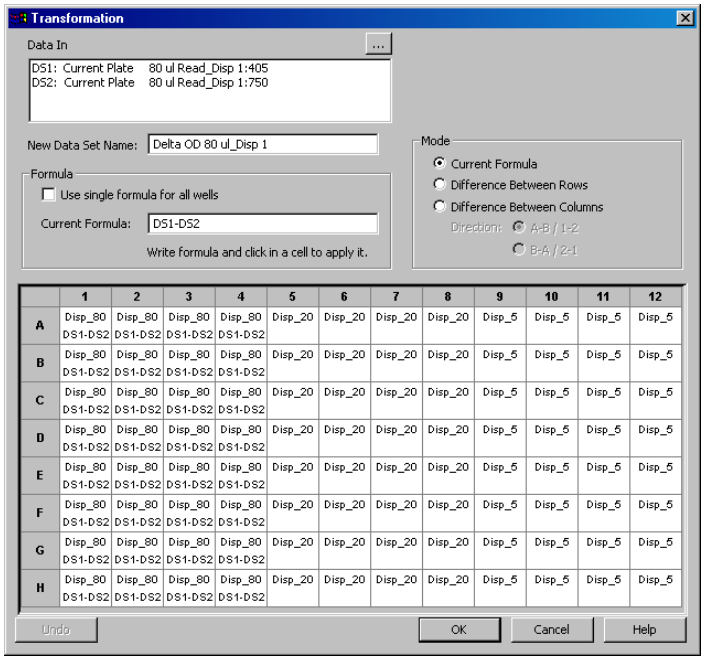

9. Click **OK** to add the transformation to the Data Reduction list.
10. Create another Transformation similar to the above, with these characteristics:
    - **DS1** set to the **20 and 5** µL Read step at **630** nm
    - **DS2** set to the **20 and 5** µL Read step at **750** nm
    - **New Data Set Name** resembling 'Delta OD 20 and 5 ul_Disp <#>'
    - Formula **DS1-DS2** applied to wells **A5** to **H12**
11. When you're finished, the Data Reduction Steps list will show two Delta OD transformations:

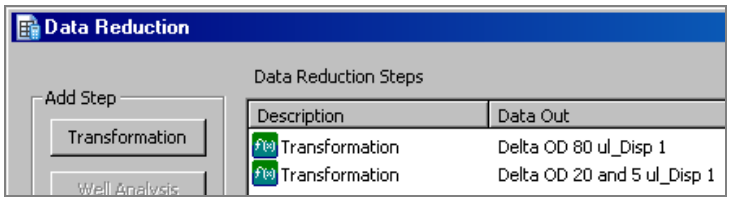

12. Click **OK** to close the Data Reduction dialog.

❖ Select **File|Save As** and give the protocol an identifying file name, such as "Synergy HT Dispenser 1.prt."

Creating the Test Protocols Using KC4™

To perform the Dispense Accuracy and Precision tests, you'll need to create a total of **six** Dispense protocols in KC4 (three per dispenser). If you will be using one of BioTek's absorbance readers (including the Synergy HT), you'll need to create **two** additional protocols for reading the plate after the dispenses.

To create the **Dispense** protocols, start by launching KC4 and setting the current reader to the **Synergy HTTR w/Injectors**.

❖ Perform the following set of steps three times to create six protocols, for the 80, 20, and 5 µl tests for Dispenser **1** and Dispenser **2**.

1. If a Data file is open, close it now (**Data|Close**).
2. Select **Protocol|New** and then **Protocol|Reading**. The Reading Parameters dialog opens.
3. Select the **Dispense** box and set the **Reading Type** to **Endpoint**.

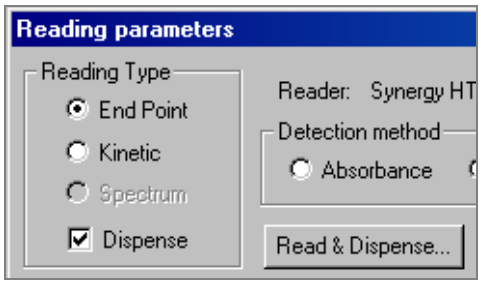

4. Click the **Read & Dispense** button. The Read & Dispense dialog opens (see the screen shot on the next page).
5. Set **Read Mode** to **Plate**.
6. Click the **Dispense** button and set the following:
   - Set **Dispenser** to 1
   - Set **Priming** to "Before the dispense"
   - Set the **Tip Prime Volume, Dispense Volume,** and **Rate** as follows:

Tip Prime Volume	Dispense Volume	Rate
20 µL	80 µL/well	275 µL/sec
20 µL	20 µL/well	250 µL/sec
5 µL	5 µL/well	225 µL/sec

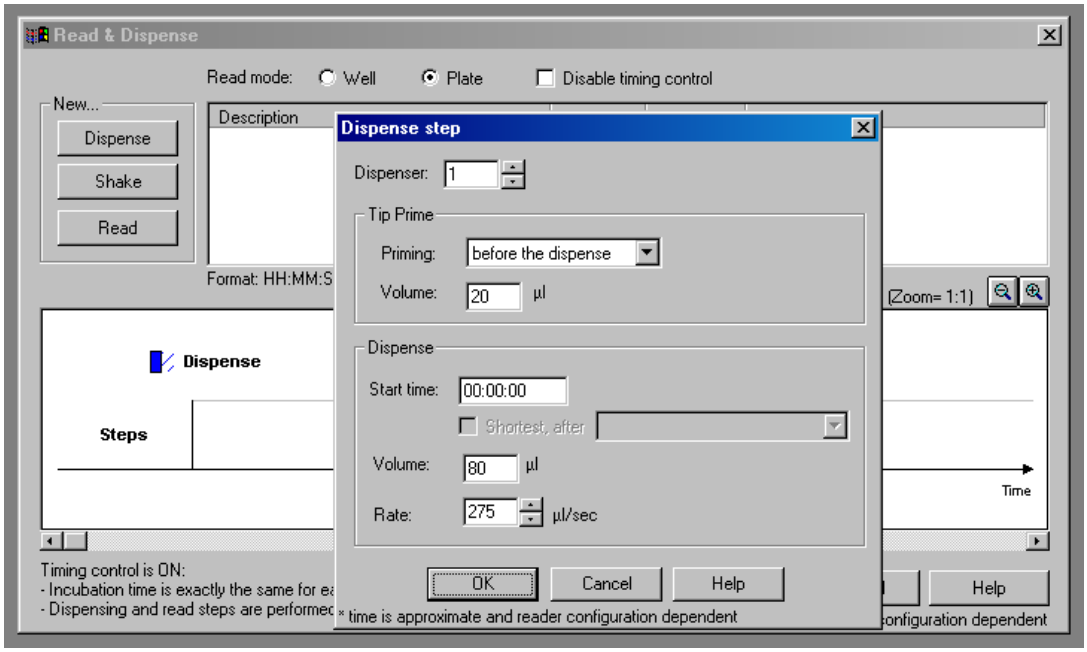

7. Click **OK**, **OK** to return to the Reading Parameters dialog.
8. Select the appropriate **Plate Type**, or set it to 96 WELL PLATE.
9. Set **First Well** and **Last Well** as follows:

	80 µl Test	**20 µl Test**	**5 µl Test**
First/Last Well	A1/H4	A5/H8	A9/H12

10. Leave all other parameters set to their defaults. Click **OK** to return to the Main Menu.
11. Select **Protocol|Save As** and give the protocol an identifying name that includes the dispenser number and the dispense volume, such as 'Dispenser 1_80 ul'. Keep the protocol open.
12. Select **Protocol|Reading** again and return to the Read & Dispense dialog.
13. Double-click on the **DISPENSE** item (as shown below) to open the Dispense dialog, and change the **Dispenser** to **2**.

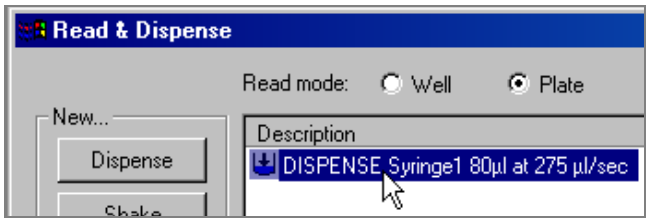

14. Return to the main menu and select **Protocol|Save As**. Modify the file name so that it includes dispenser number **2** (e.g., Dispenser **2**_80 ul).

To create the **Read** protocols, start by launching KC4 and setting the current reader to the absorbance reader.

❖ Perform the following set of steps two times to create two protocols, for the 80 µL and 20 & 5 µl reads.

1. If a Data file is open, close it now (**Data|Close**).
2. Select **Protocol|New** and then **Protocol|Reading**. The Reading Parameters dialog will open. See the sample screen shots on the next page.
3. If the current reader is the Synergy, set **Detection Method** to **Absorbance**.
4. Select two **Wavelengths**, as follows:

	80 µl Read	**20 & 5 µl Read**
First (or Meas) Wavelength	405 nm	630 nm
Second (or Ref) Wavelength	750 nm	750 nm

Note: KC4 automatically creates a multi-plate transformation to subtract the second wavelength from the first. The name of the resulting data set is "Delta OD."

5. Select the appropriate **Plate Type**, or set it to 96 WELL PLATE.
6. Set **First Well** and **Last Well** as follows:

	80 µl Read	**20 & 5 µl Read**
First/Last Well	A1/H4	A5/H12

7. If the reader supports shaking, set:
   - **Shake Intensity** to **4** (Variable)
   - **Duration** to **15** seconds
8. Leave all other parameters set to their defaults. Click **OK** to return to the Main Menu.
9. Select **Protocol|Plate Layout**. Assign wells to the plate as shown on page 119. Click **OK** to return to the main menu.
10. Select **Protocol|Save As** and give the protocol an identifying name that includes the dispense volume, such as Delta 80 and Delta 20 and 5.

Sample KC4 Reading Parameters Dialog for the 80 µL Read Protocol, using the Synergy HTTR w/Injectors

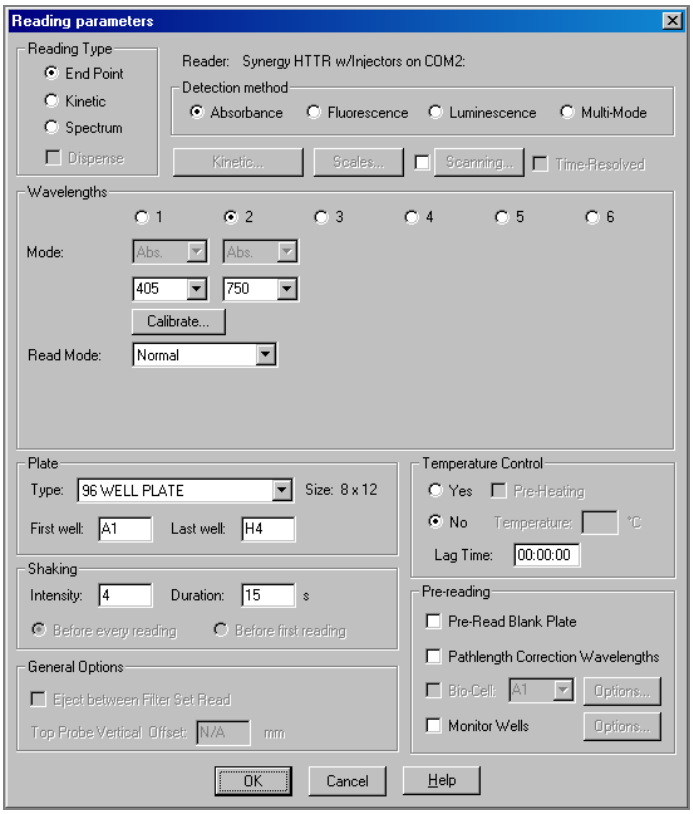

Sample KC4 Reading Parameters Dialog for the 20 & 5 µL Read Protocol, using the ELx808

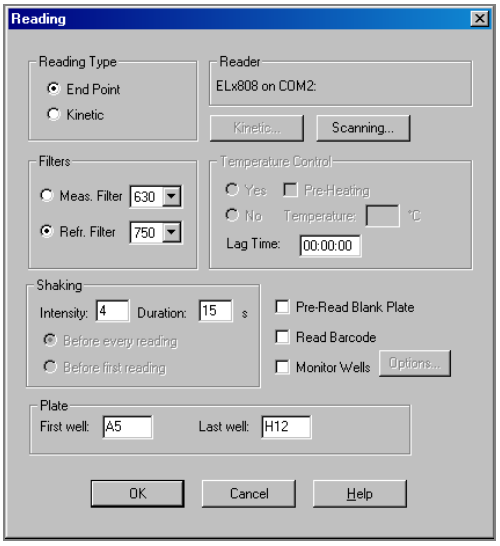

Sample KC4 Plate Layout for the 80 µL Read Protocol

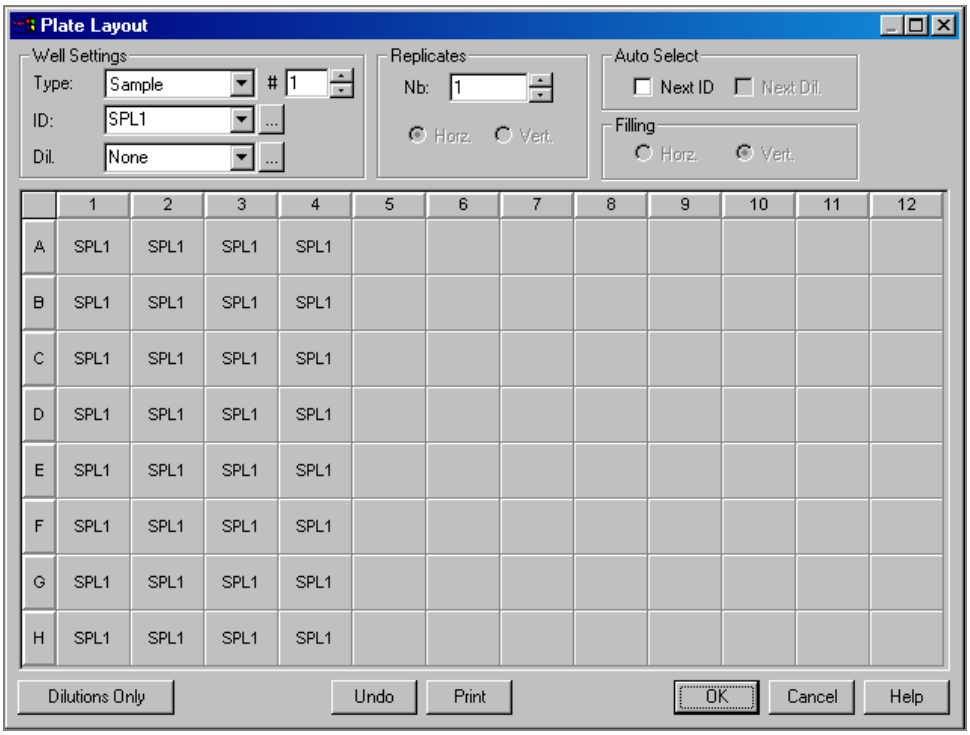

Sample KC4 Plate Layout for the 20 & 5 µL Read Protocol

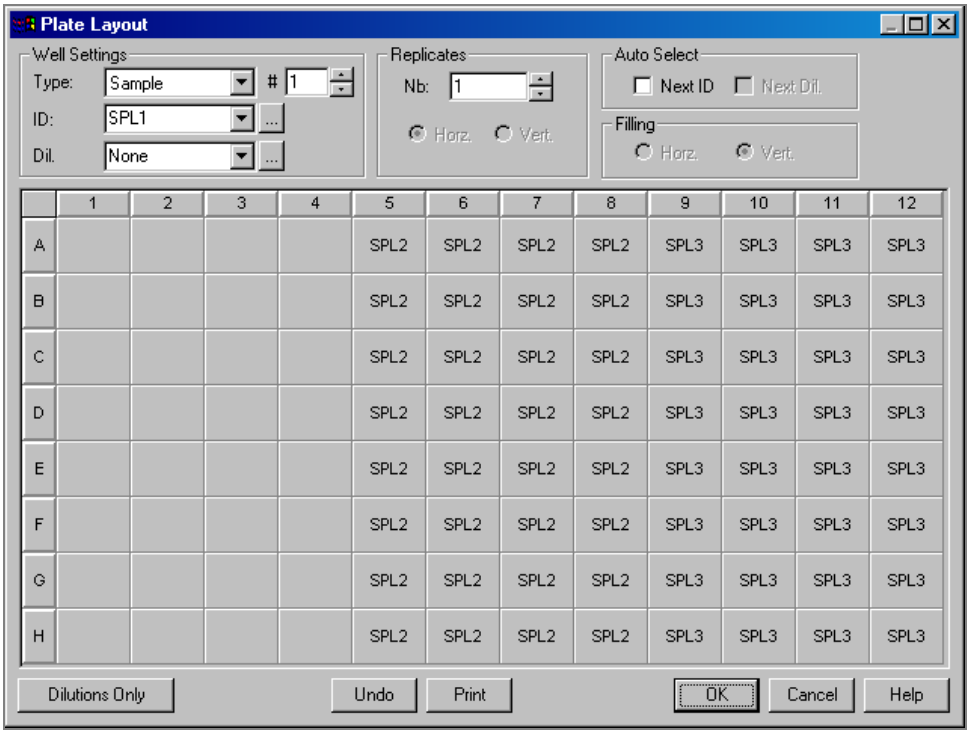

Synergy™ HT Dispense Accuracy & Precision Tests - Dispenser #____

	80 µL Dispense Delta ODs @405/750 nm			
	1	2	3	4
A				
B				
C				
D				
E				
F				
G				
H				

80 µL weight: _____ g

Expected weight: 2.5600 g

Accuracy % Error: _____ %

Must be <= 2.0% ☐ P ☐ F

Standard Deviation: _____

Mean: _____

%CV: _____ %

Must be <= 2.0% ☐ P ☐ F

	20 µL Dispense Delta ODs @630/750 nm			
	5	6	7	8
A				
B				
C				
D				
E				
F				
G				
H				

20 µL weight: _____ g

Expected weight: 0.6400 g

Accuracy % Error: _____ %

Must be <= 5.0% ☐ P ☐ F

Standard Deviation: _____

Mean: _____

%CV: _____ %

Must be <= 7.0% ☐ P ☐ F

	5 µL Dispense Delta ODs @630/750 nm			
	9	10	11	12
A				
B				
C				
D				
E				
F				
G				
H				

5 µL weight: _____ g

Expected weight: 0.1600 g

Accuracy % Error: _____ %

Must be <= 20.0% ☐ P ☐ F

Standard Deviation: _____

Mean: _____

%CV: _____ %

Must be <= 10.0% ☐ P ☐ F

Reader Model: _____

Reader S/N: _____

Reading Date: _____

Comments:

Tested By: _____

Signature: _____

Reviewed/ Approved By: _____

Signature: _____

Chapter 5

Preventive Maintenance

This chapter provides step-by-step instructions for maintaining the Synergy™ HT and external dispense module (if used) in top condition, to ensure that they continue to perform to specification.

Recommended Maintenance Schedule 124
- Overview 124
- Dispense Module 124
- Schedule 124

Warnings & Precautions 126
Cleaning Exposed Surfaces 127
Inspecting/Cleaning Excitation and Emission Filters 128
Flushing/Purging the Fluid Path 129
Running a Dispense Protocol (Optional) 130
Emptying/Cleaning the Tip Priming Trough 132
Cleaning the Priming Plate 132
Cleaning the Internal Components 133
- Required Materials 134
- Removing the Reader's Shroud 135
- Removing the Internal Tubes and Injector Heads 137
- Cleaning the Internal Tubes and Injector Heads 140
- Cleaning the Optical Probes 141
- Cleaning the Reader's Internal Surface 149
- Reassembling the Components 150
- Performance Check 151

Recommended Maintenance Schedule

Overview

A general **Preventive Maintenance** (**PM**) regimen for all Synergy™ HT models includes periodically cleaning all exposed surfaces and inspecting/cleaning the Excitation and Emission filters. For models with the external dispense module, additional tasks include flushing/purging the fluid path and cleaning the tip prime trough, priming plate, supply bottles, internal dispense tubing, and injector heads.

Dispense Module

To keep the dispense module and injectors in top condition, flush and purge the fluid lines with deionized (DI) water every day or upon completion of an assay run, whichever is more frequent. Some reagents may crystallize or harden after use, clogging the fluid passageways. Flushing the tubing at the end of each day, letting the DI water soak them overnight, and then purging the lines at the beginning of each day ensures optimal performance of the dispense system. Perform a visual inspection of the dispensing accuracy before conducting an assay that requires dispense to verify instrument performance.

It is important to keep the dispensing lines scrupulously clean at all times. Take special care when using molecules active at very low concentrations (e.g., enzymes, inhibitors). Remove any residual reagent in the dispensing lines using a suitable cleaning solution (review the reagent's package insert for specific recommendations).

A daily cleaning regimen is the best way to ensure accurate performance and a long-life for your instrument and dispense module. BioTek also recommends flushing the module with DI water before conducting the decontamination procedure described in ***Appendix A***.

Schedule

The following charts recommend Preventive Maintenance tasks and the frequency with which each task should be performed.

❖ It is important to note that the risk and performance factors associated with your assays may require that some or all of the procedures be performed more frequently than presented in the schedule.

Tasks for Synergy HT Models <u>without</u> Injectors		**Frequency**	
Task	**Page**	**Quarterly**	**As Needed**
Clean Exposed Surfaces	127		✓
Inspect/Clean Excitation and Emission Filters	128	✓	
Decontamination (see *Appendix A*)		Before shipment or storage	

Tasks for Synergy HT Models <u>with</u> Injectors		**Frequency**		
Task	**Page**	**Daily**	**Quarterly**	**As Needed**
Clean Exposed Surfaces	127			✓
Inspect/Clean Excitation and Emission Filters	128		✓	
Flush/Purge the Fluid Path	129	✓		
(Optional) Run Dispense Protocol	130			✓
Empty/Clean Tip Prime Trough	132	✓		
Clean Priming Plate	132			✓
Clean Internal Dispense Tubing and Injector Heads	140		✓	
Clean Optical Probes	141		✓	
Clean Internal Surfaces	149		✓	✓
Decontamination (see *Appendix A*)		Before shipment or storage		

Warnings & Precautions

Please read the following before performing any maintenance procedures:

	Warning! Internal Voltage. Turn off and unplug the instrument for all maintenance and repair operations.
	Warning! Wear protective gloves when handling contaminated instruments. Gloved hands should be considered contaminated at all times; keep gloved hands away from eyes, mouth, nose, and ears.
	Warning! Mucous membranes are considered prime entry routes for infectious agents. Wear eye protection and a surgical mask when there is a possibility of aerosol contamination. Intact skin is generally considered an effective barrier against infectious organisms; however, small abrasions and cuts may not always be visible. Wear protective gloves when handling contaminated instruments.
	Important! Do not immerse the instrument, spray it with liquid, or use a “wet” cloth on it. Do not allow water or other cleaning solution to run into the interior of the instrument. If this happens, contact BioTek’s Technical Assistance Center.
	Important! Do not apply lubricants to the microplate carrier or carrier track. Lubrication on the carrier mechanism or components in the carrier compartment will attract dust and other particles, which may obstruct the carrier path and cause the reader to produce an error.
	Caution! The buildup of deposits left by the evaporation of spilled fluids within the read chamber can impact measurements. Be sure to keep System Test records before and after maintenance so that changes can be noted.
	Caution! Models with injectors. Before removing the reader’s cover to expose internal parts, purge the dispense module, turn off the instrument, and disconnect the fluid line, power cable, and PC cable.
	Warning! The fluorescence lamp assembly is hot when the instrument is powered on. If the instrument is on, turn it off and allow the lamp to cool down before attempting to replace it.

Cleaning Exposed Surfaces

Important! Turn off and unplug the instrument for all cleaning operations.

Important! Do not immerse the instrument, spray it with liquid, or use a "wet" cloth. Do not allow the cleaning solution to run into the interior of the instrument. If this happens, contact BioTek's Service Department.

Exposed surfaces may be cleaned (not decontaminated) with a cloth moistened (not soaked) with water or water and a mild detergent. You'll need:

- Deionized or distilled water
- Clean, lint-free cotton cloths
- Mild detergent (optional)

To clean the exposed surfaces:

1. Turn off and unplug the instrument.
2. Moisten a clean cotton cloth with water, or with water and mild detergent. **Do not soak the cloth**.
3. Wipe the plate carrier and all exposed surfaces of the instrument.
4. Wipe all exposed surfaces of the dispense module (if used).
5. If detergent was used, wipe all surfaces with a cloth moistened with water.
6. Use a clean, dry cloth to dry all wet surfaces.
7. Reassemble the instrument as necessary.

- **Models with injectors:** If the Tip Priming Trough overflows, wipe the carrier and the surface beneath the carrier with a dry cotton cloth. If overflow is significant, you may have to remove the shroud of the instrument to better access the surface beneath the carrier.
- See page 135 for instructions on removing the shroud.
- See page 149 for instructions for cleaning the surface beneath the carrier.

Inspecting/Cleaning Excitation and Emission Filters

Laboratory air is used to cool the lamp, and the filters can become dusty as a result. The filters should be inspected and cleaned at least every three months. You'll need:

- Isopropyl, ethyl, or methyl alcohol
- Lens-cleaning tissue

❖ Do not touch the filters with your bare fingers!

To inspect and clean the Excitation and Emission filters:

1. Turn off and unplug the instrument.
2. Pull down the hinged door on the front of the instrument. Observe the two thumbscrews within the compartment. The left thumbscrew holds the **excitation** (EX) filter wheel in place; the right secures the **emission** (EM) filter wheel. Remove each thumbscrew and slide the filter wheel's supporting metal bracket straight out of the compartment.

❖ ***Chapter 3, Getting Started*** contains illustrations for identifying the filter wheels and their unique characteristics. This chapter also contains instructions for replacing filters if necessary.

3. Inspect the glass filters for speckled surfaces or a halo effect. This may indicate deterioration due to moisture exposure over a long period of time.
   - If you have any concerns about the quality of the filters, contact your BioTek representative.
4. Clean the filters using lens-cleaning tissue moistened with a small amount of isopropyl, ethyl, or methyl alcohol. Ensure that the filters remain in their current locations.
5. Replace the filter wheel brackets in their respective positions and replace the thumbscrews. Close the hinged door.

Flushing/Purging the Fluid Path

Applies only to Synergy™ HT models with injectors.

At the end of each day that the dispense module is in use, **flush** the fluid path using Gen5's or KC4's priming utility. Leave the fluid to soak overnight or over a weekend, and then **purge** the fluid before using the instrument again.

Note: This flushing and purging routine is also recommended before disconnecting the outlet tubes from the rear of the reader, and before decontamination to remove any assay residue prior to applying isopropyl alcohol or sodium hypochlorite.

To **flush** the fluid path:

1. Fill two supply bottles with deionized or distilled water. Insert the supply (inlet) tubes into the bottles.
2. Place the priming plate on the carrier.
3. **Gen5:** Select **System|Reader Control|Synergy(Com<#>)**.

   KC4: Select **System|Reader Control**.
4. Click the **Dispenser** tab and select **Dispenser 1**.
5. Set the **Volume** to 5000 µL. Keep the default prime **Rate**.
6. Click **Prime** to start the process. When the process is complete, carefully remove the priming plate from the carrier and empty it.
7. Repeat the process for **Dispenser 2**.

   Leave the water in the system overnight or until the instrument will be used again. Purge the fluid from the system (see below) and then prime with the dispense reagent before running an assay.

To **purge** the fluid from the system:

1. Place the inlet tubes in empty supply bottles or a beaker.
2. **Gen5:** Select **System|Reader Control|Synergy(Com<#>)**.

   KC4: Select **System|Reader Control**.
3. Click the **Dispenser** tab and select **Dispenser 1**.
4. Set the **Volume** to 2000 µL.
5. Click **Purge** to start the process.
6. When the purge is complete, repeat the process for **Dispenser 2**.

❖ After purging the system, you may wish to run a quick Dispense protocol to visually verify the dispense accuracy. See the next page for instructions for creating the protocol.

Running a Dispense Protocol (Optional)

Applies only to Synergy™ HT models with injectors.

After flushing/purging the system (page 129) and before running an assay that requires dispense, take a moment to visually inspect the dispensing accuracy.

> Use a DI H_2O-Tween solution to check for dispense accuracy following maintenance: e.g., add 1 ml Tween® 20 to 1000 ml of deionized water.

To create the Dispense protocol in Gen5™:

1. Select **File|New Protocol** and then **Protocol|Procedure**.
2. Add a **Dispense** step with the following parameters:
   - Select **Dispenser 1**
   - Set **Tip Priming** to **Before this dispense step** and **Volume** to **10** µL.
   - Set the **Dispense Volume** to **100 µL** (or an amount to match your assay protocol).
   - Select a **Rate** (adjust the rate to support the dispensing volume).
   - Click **OK** to close the dialog and add the Dispense step to the list.
3. Add another **Dispense** step with the same parameters, selecting **Dispenser 2**.
4. Add a quick **Read** step with the following parameters (Gen5 requires that a Read step follow the Dispense step):
   - Define a **partial plate** read on just one well (e.g., A1)
   - Set the **Detection Method** to **Absorbance**
   - Set the **Read Type** to **Endpoint**
   - Set the **Read Speed** to **Normal**
   - Select any **wavelength**
5. Click **OK** to close the dialog and add the Read step to the list.
6. Click **OK** to close the Procedure.
7. Select **File|Save As** and give the protocol an identifying name, such as "Dispense Observation."
8. Select **File|New Experiment** to run the Dispense Observation protocol.
9. Click the **Read** button and follow the prompts.

10. When the procedure is complete, visually assess the fluid level in the wells for accuracy. If the well volume appears to be unevenly distributed, clean the internal dispense tubes and injector heads as described in ***Cleaning Internal Components*** on page 133.

To create the Dispense protocol in KC4™:

1. If a Data file is open, close it now **(Data|Close)**.
2. Select **Protocol|New** and then **Protocol|Reading**.
3. In the Reading parameters dialog:
   - Check the **Dispense** box and set the **Reading Type** to **Endpoint**.
   - Select a **Plate Type** of 96 WELL PLATE or select a custom format that exactly matches the plate being used for this test.
   - Leave all other parameters set to their default values.
4. Next to the Dispense check box, click the **Read & Dispense** button.
5. In the Read & Dispense dialog, set **Read Mode** to **Plate**.
6. Click the **Dispense** button. In the **Dispense Step** dialog:
   - Select **Dispenser 1**
   - Set **Priming** to **Before the process** and **Volume** to **5** µL.
   - Leave **Start Time** set to 00:00:00.
   - Set the **Volume** to **100 µL** (or an amount to match your assay protocol).
   - Select a **Rate** (adjust the rate to support the dispensing volume).
   - Click **OK** to close the dialog and add the Dispense step to the list.
7. Click **OK** to close the dialog and return to the Reading parameters dialog.
8. Click **OK** to save the settings and return to the main menu.
9. Select **Protocol|Save As** and give the protocol an identifying name, such as "Dispenser 1 Observation."
10. Repeat these steps to create a protocol for **Dispenser 2**.
11. Run the two protocols on two different plates. When finished, visually assess the fluid level in the wells for accuracy. If the well volume appears to be unevenly distributed, clean the internal dispense tubes and injector heads as described in ***Cleaning Internal Components*** on page 133.

Emptying/Cleaning the Tip Priming Trough

Applies only to Synergy™ HT models with injectors.

The tip priming trough is a small, removable priming cup located in the left rear of the microplate carrier, used for performing the Tip Prime. The trough holds about 1.5 mL of liquid and must be periodically emptied and cleaned by the user.

To empty/clean the tip prime trough:

1. Extend the microplate carrier and carefully remove the tip priming trough from its pocket in the left rear of the carrier.
2. Wash the trough in hot, soapy water. Use a small brush to clean in the corners.
3. Rinse the trough thoroughly and allow it to dry completely.
4. Replace the trough in the microplate carrier.

When starting a Gen5™ Experiment that includes dispensing, Gen5 will prompt you to empty the tip prime trough. Follow the instructions provided.

When starting a KC4™ Read & Dispense protocol, KC4 may prompt you to empty the tip priming trough. In this case, KC4 will automatically open the System|Reader Control, Dispenser dialog. Empty the trough and then click the **Dump Tip Prime Trough(s)** button. The Tip Prime Trough value will reset to '1500 µl remaining'.

Cleaning the Priming Plate

Applies only to Synergy™ HT models with injectors.

Clean the priming plate regularly to prevent bacteria growth and residue buildup. Wash the plate in hot soapy water, using a small brush to clean in the corners if necessary. Rinse thoroughly and allow it to dry completely.

Cleaning the Internal Components

Applies only to Synergy™ HT models with injectors.

The Synergy HT's internal components that require routine cleaning include:

- Optical probes
- Surface beneath the microplate carrier
- Internal dispense tubes and injector heads

The internal components should be cleaned at least *quarterly*. In addition, if fluid has spilled inside the instrument and/or if an unusually high background signal has been flagged by the assay controls (typically blanks or negative controls), the optical probes and the surface beneath the microplate carrier should be cleaned.

❖ The procedures in this section should be performed in succession. Start with ***Removing the Reader's Shroud*** and execute the procedures that meet your needs, in the order in which they are presented. Finish with ***Reassembling the Components***.

We recommend running a **System Test** (via Gen5™ or KC4™) before and after performing these cleaning procedures. This will verify that all systems are functioning properly and allow you to compare results before and after maintenance.

Caution! The buildup of deposits left by the evaporation of spilled fluids within the read chamber can impact performance of both the fluorescence and absorbance functions. Be sure to perform a **System Test** before and after maintenance so that any changes in performance can be noted.

Required Materials

Warning! Always wear protective gloves and safety glasses when performing cleaning/maintenance procedures.

For all tasks:

- Protective gloves
- Safety glasses

For removing the shroud and some of the internal components:

- Phillips-head screwdriver
- 1/8” Allen wrench
- 3/32” Allen wrench

For cleaning the internal dispense tubes and injector heads, as well as for wiping the surface under the plate carrier:

- Mild detergent
- Clean, lint-free cotton cloths
- Deionized or distilled water
- Stylus (stored in a plastic cylinder affixed to the rear of the dispense module or reader) (PN 2872304)

For cleaning the optical probes:

- Clean cotton swabs
- Isopropyl alcohol
- Lens-cleaning tissue

Removing the Reader's Shroud

The Synergy™ HT's shroud (cover) must be removed to expose the internal components.

> **Caution! Before removing the shroud:** Purge the dispense module (see page 129 for instructions), and then turn off and disconnect the reader from its power supply, the PC, and the dispense module.

1. Disconnect power and all cables. Set the external dispense module aside.
2. Place the Synergy HT on a work surface that allows you to easily access all sides of the instrument.
3. Remove four black Phillips-head screws: one at the bottom rear corner on each side, and two at the top center of the rear panel.

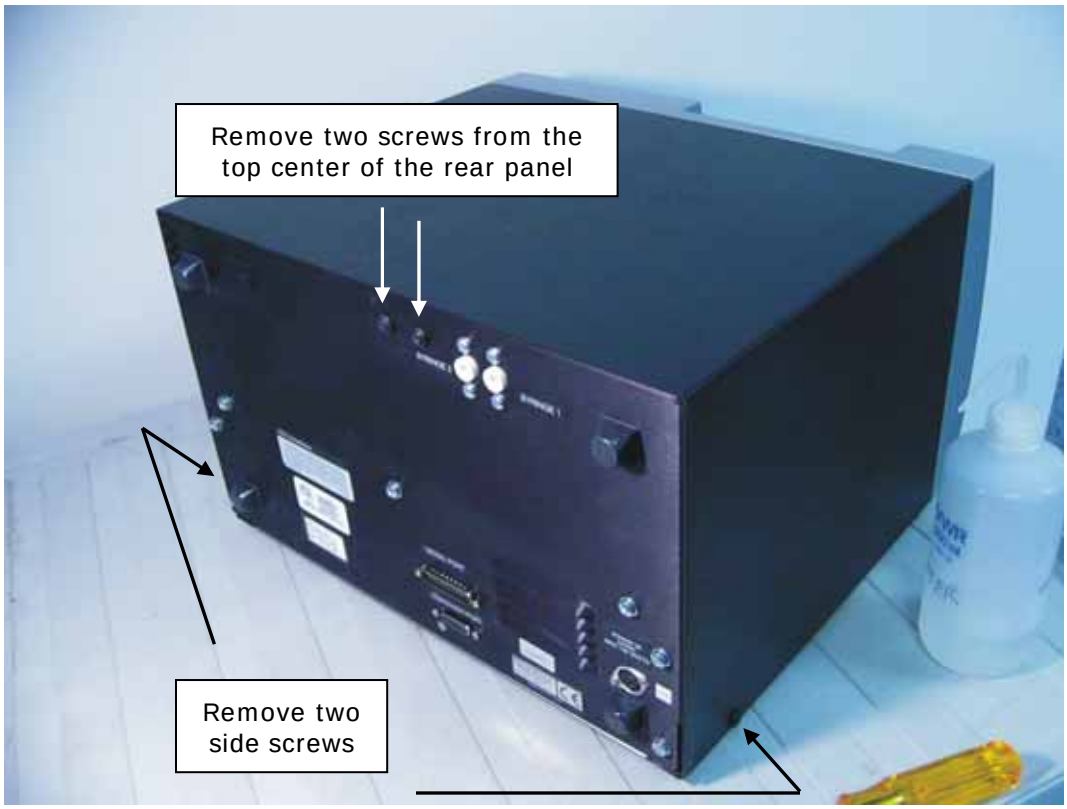

> ❖ **Note:** When **reinstalling** the shroud, press down firmly on the top to maintain a good light seal while tightening the top screws.

4. Stand facing the front of the instrument. Grasp both sides of the shroud, slide it toward you, and pull it straight off the instrument. Set the shroud aside.

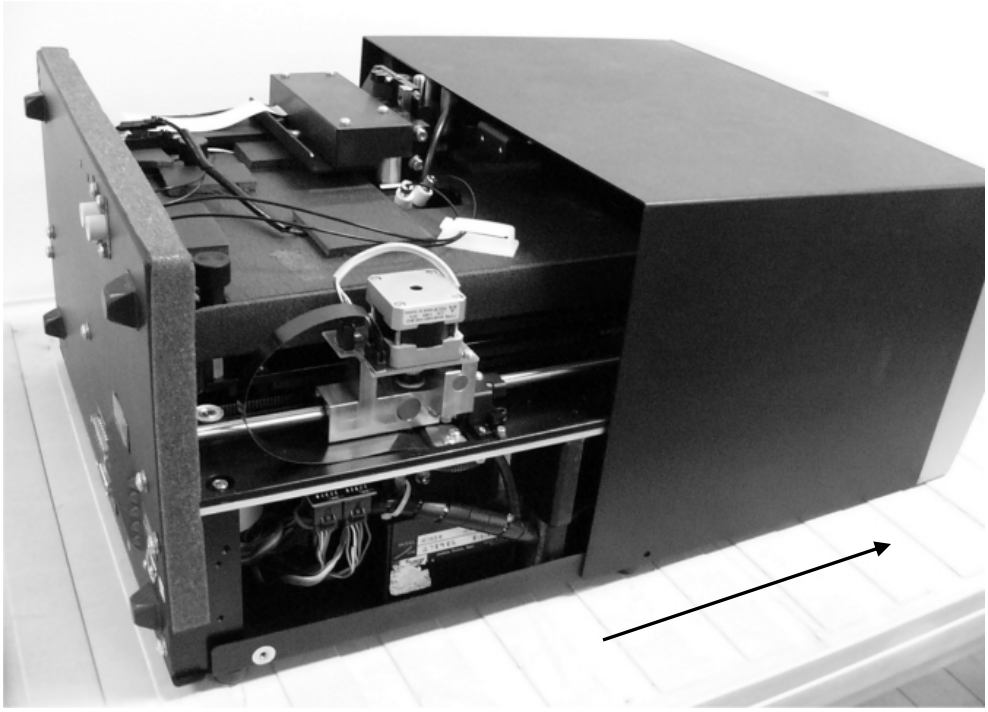

Removing the Internal Tubes and Injector Heads

Take a moment to identify the components described in this section:

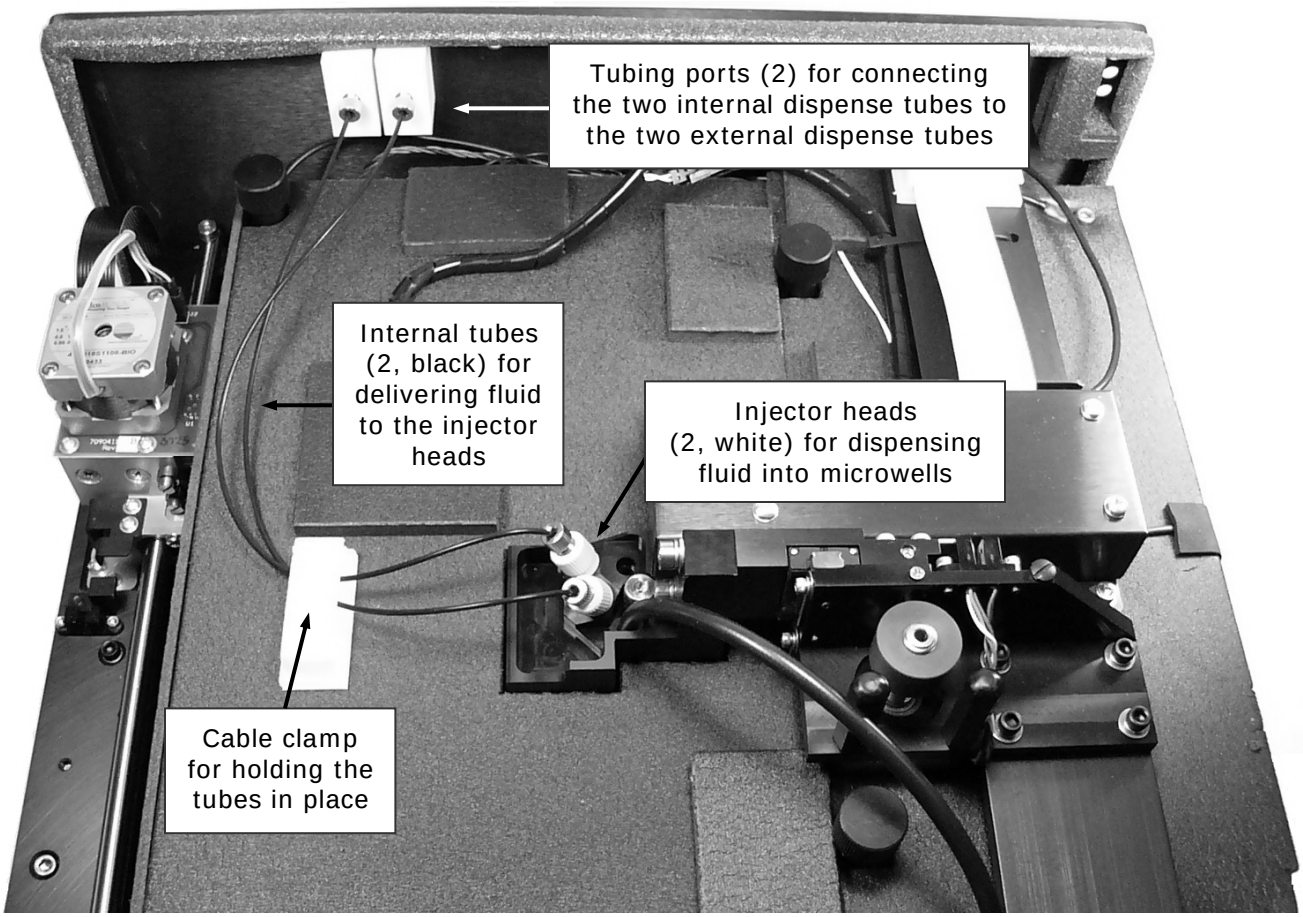

Figure 37: Internal components for the injection system

Important! When reinstalling the internal dispense tubes, be sure to align the tubing ports with the injector heads as shown in this diagram. Look for the **SYRINGE 1** and **SYRINGE 2** labels on the instrument's rear panel.

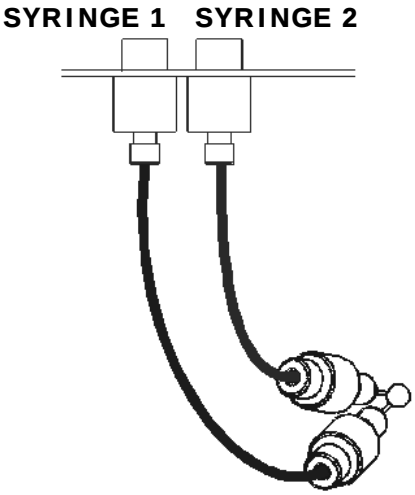

Perform these steps to remove both sets of internal dispense tubes and injector heads:

1. Open the cable clamp to release the tubes.
2. Locate the tubing ports on the reader's rear wall. Turn each tube's thumbscrew counterclockwise and gently pull the tube from the port.

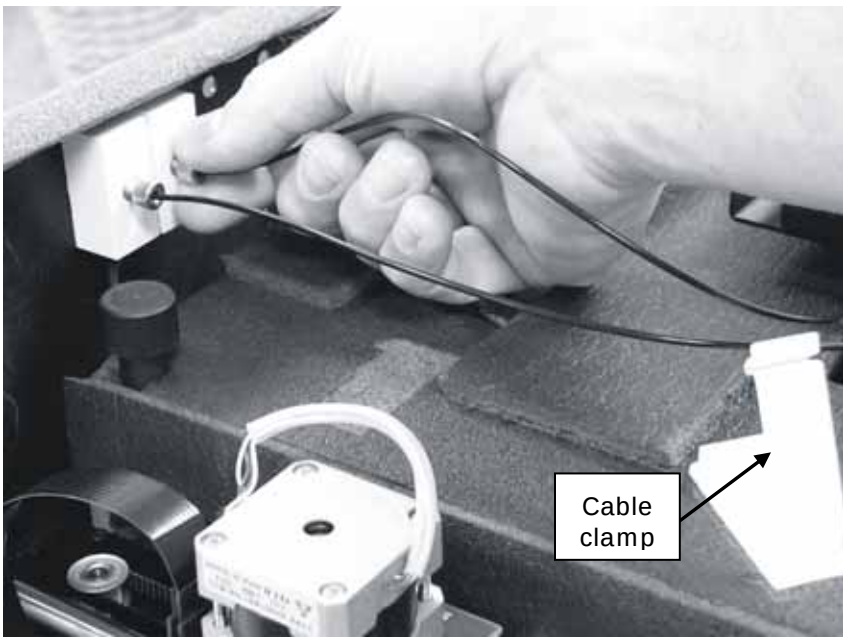

3. Locate the injector heads. Turn each tube's thumbscrew counterclockwise to disconnect the tube from the injector head.

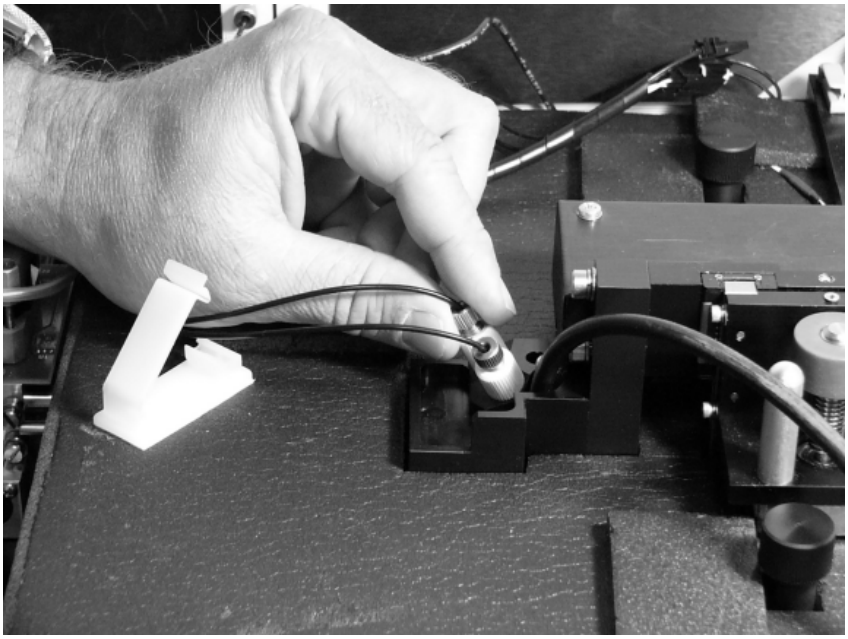

4. Turn the injector heads counterclockwise and gently pull them out of their sockets.

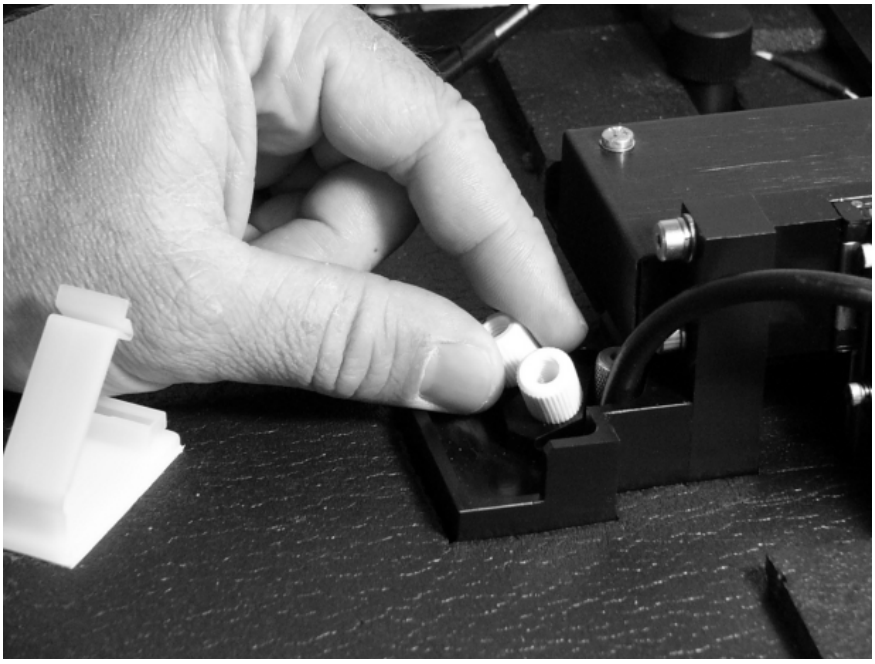

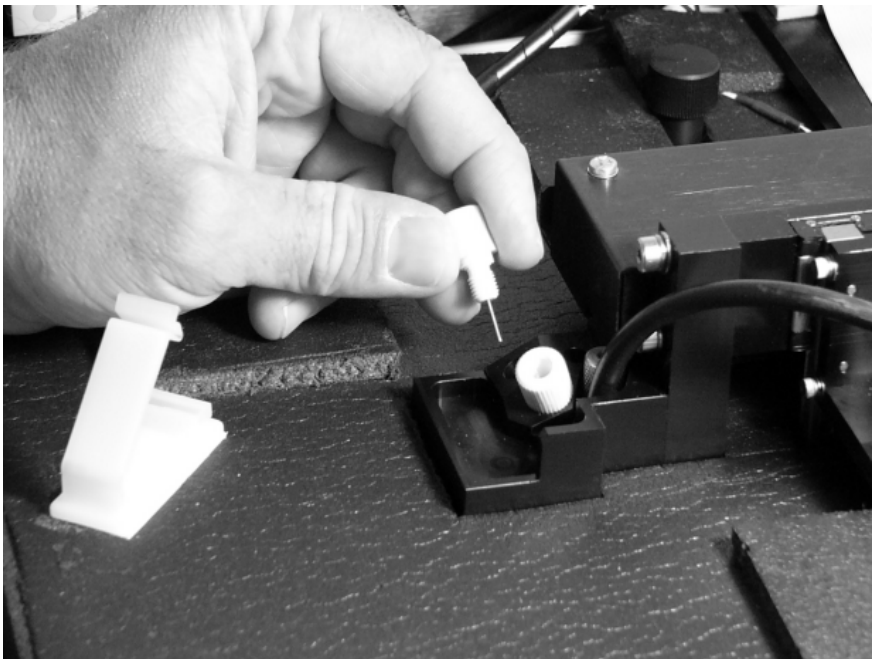

❖ **Note:** Be sure to seat the injector tips securely when **reinstalling**. See the photo on page 150.

Cleaning the Internal Tubes and Injector Heads

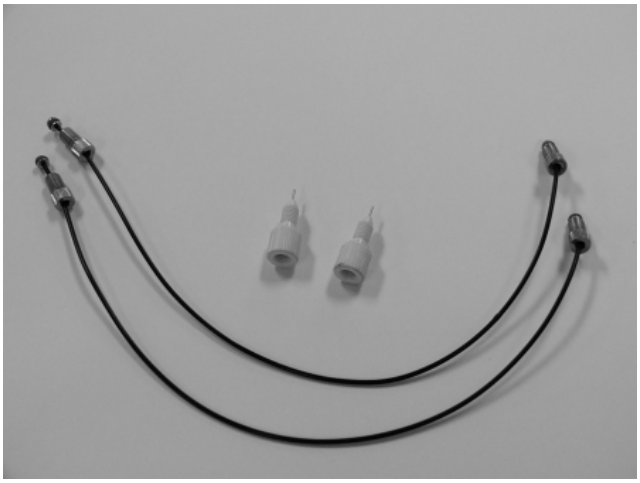

As discussed on page 124, some reagents can crystallize and clog the tubing and injector heads.

Daily flushing and purging can help to prevent this, but more rigorous cleaning may be necessary if reagent has been allowed to dry in the tubing and/or injectors.

To clean the tubes:

1. Soak the internal tubes in hot soapy water to soften and dissolve any hardened particles.
2. Flush each tube by holding it vertically under a stream of water from a faucet.

To clean the injector heads:

❖ Do not remove the **o-ring** from the injector head (see photos below).

1. Gently insert the **stylus** (PN 2872304) into each injector head pipe to clear any blockages. (The stylus should be stored in a plastic cylinder affixed to the rear of the dispense module or reader.)
2. Stream water from a faucet through the pipe to be sure it is clean. If the water does not stream out, try soaking the heads in hot soapy water and then reinserting the stylus.

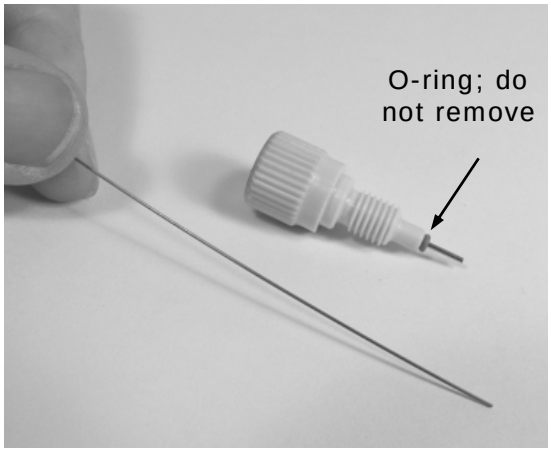

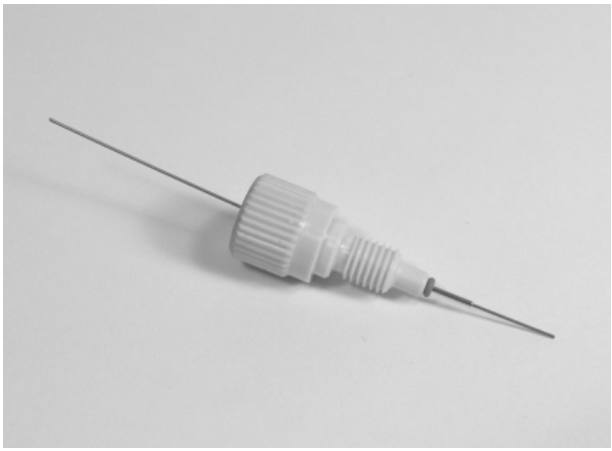

Cleaning the Optical Probes

The optical probes should be cleaned at least *quarterly*. They should also be cleaned if reagent has spilled and/or if an unusually high background signal has been flagged by the assay controls (typically blanks or negative controls).

Contaminated probes can lead to a loss of sensitivity (e.g., instead of being able to meet the 10 pg/ml concentration detection limit, the instrument may only be able to meet 20 pg/ml). Another indicator is the %CV in the Corners liquid test—it may increase due to the "Noise" in the chamber from any spilled fluorescing compounds.

- To access the optical probes, the first step is to unplug the reader and remove its shroud (cover). If you haven't already done this, turn to page 135 now for instructions. **Note:** For models without injectors, the internal chamber and probes are not customer-accessible. Contact BioTek's Technical Assistance Center with any questions about your particular model.
- We recommend cleaning the internal tubes and injector heads along with the optical probes. Instructions for removing and cleaning these components are provided on pages 137 through 140.
- Before starting this procedure, gather some supplies:
  - Small container of isopropyl alcohol
  - Small container of deionized or distilled water
  - Lens-cleaning tissue
  - Cotton swabs

Take a moment to identify the components discussed in this section:

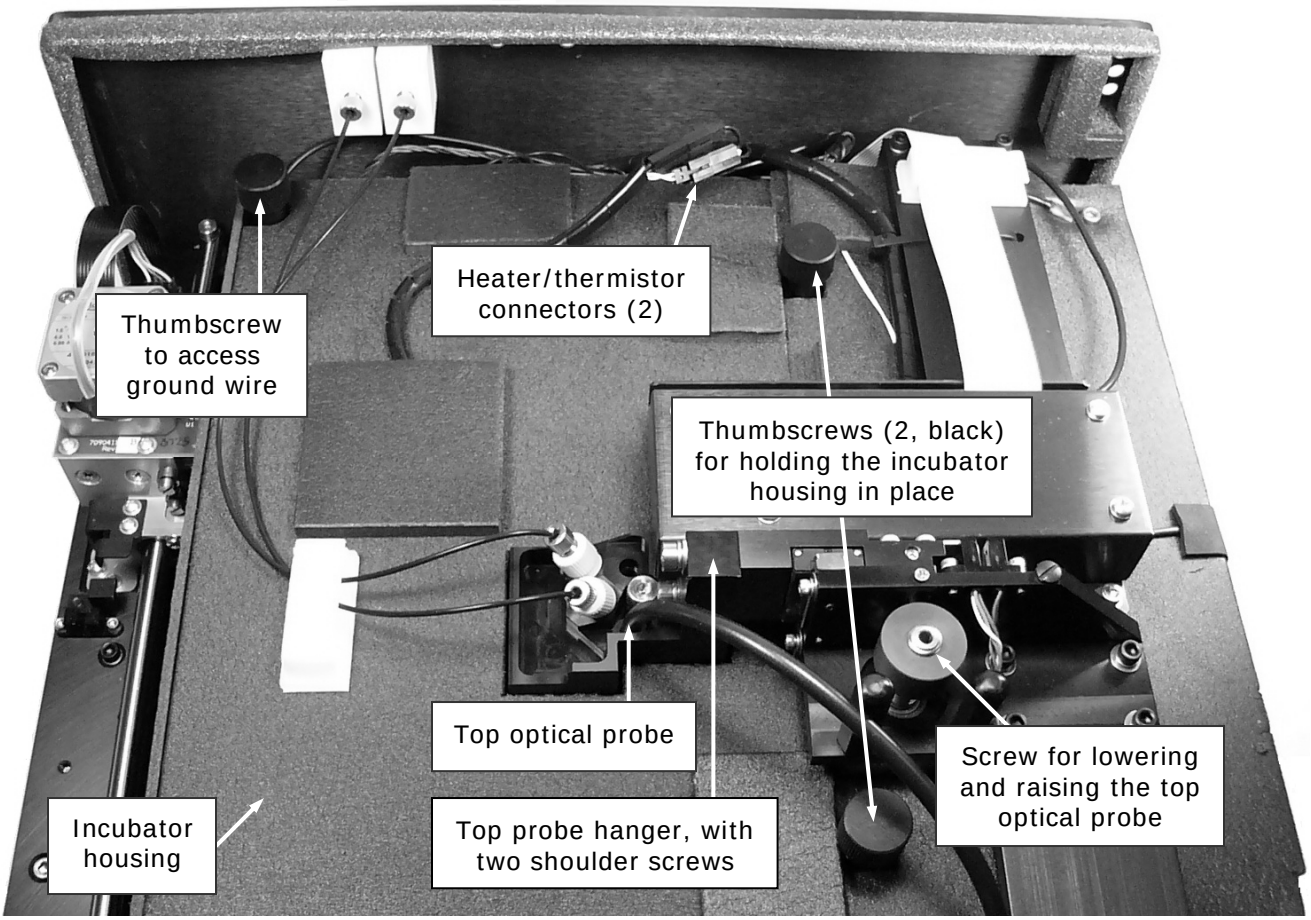

Figure 38: Internal components to be removed/adjusted for cleaning the optic probes

Once the shroud has been removed and the internal tubes and injector heads have been removed and cleaned (see page 140), follow these instructions to remove a few more components and then clean the optical probes:

1. Disconnect the heater and thermistor wires. To do this, depress the small tab (pictured below) and separate the connectors.

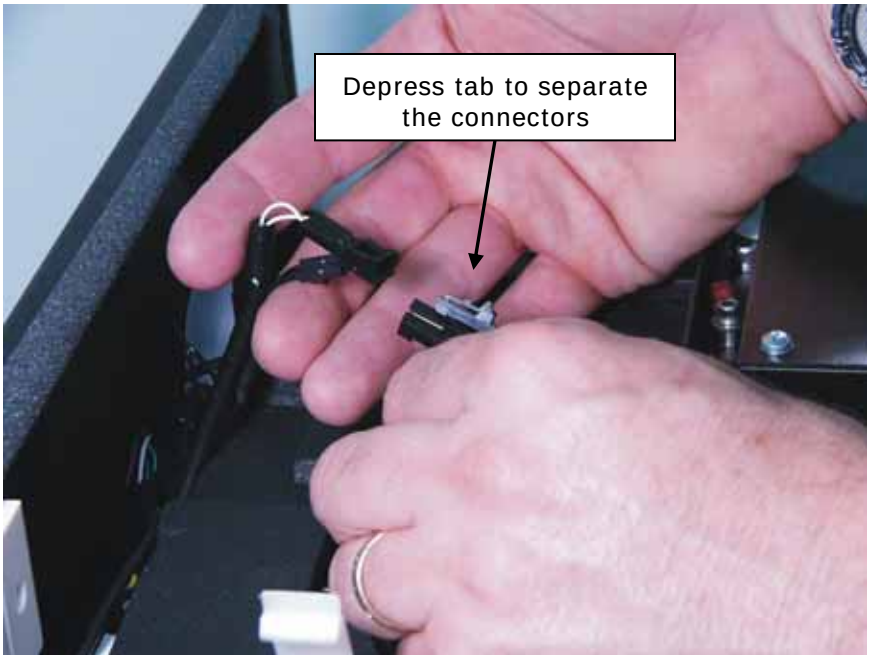

2. Remove the thumbscrew located in the left rear of the instrument and set it aside. This exposes the ground wire.

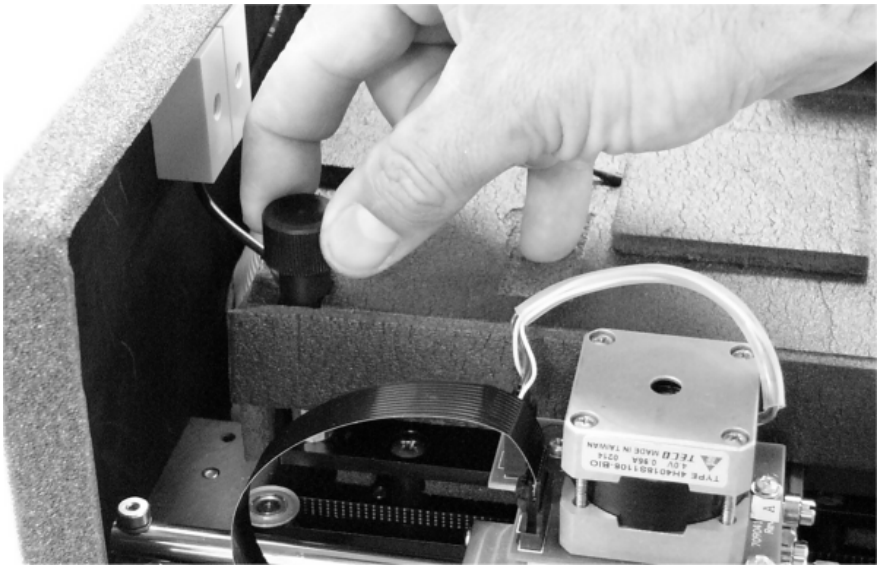

3. Lift the ground wire and move it off to the side.

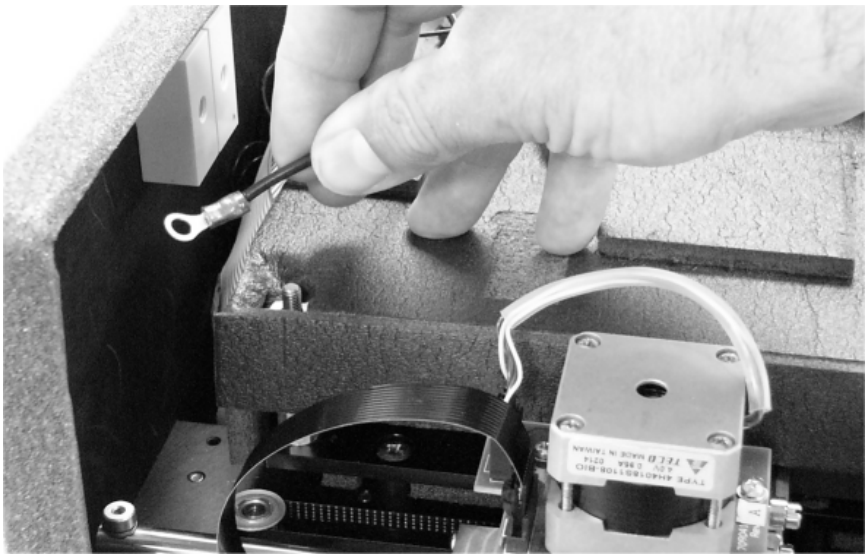

4. Locate the two black thumbscrews that hold the incubator housing in place. Remove both of them and set them aside.

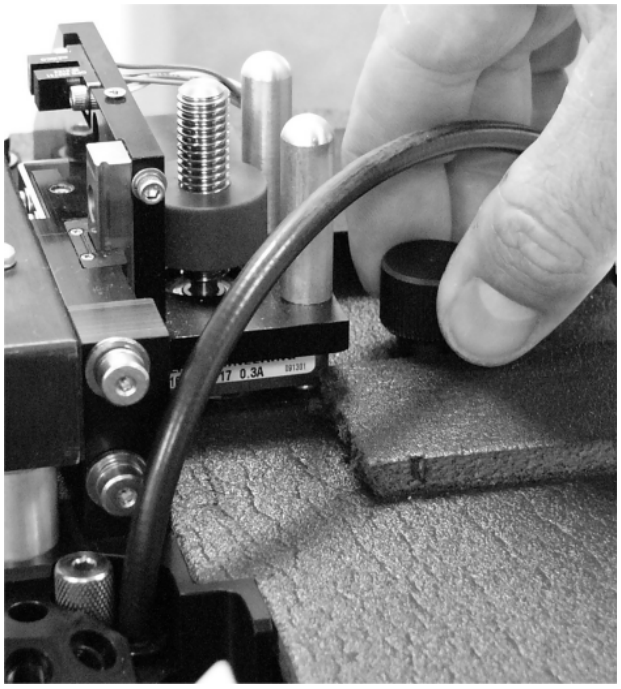

5. Turn the top probe screw counterclockwise to lower the probe hanger all the way to the bottom. (Rotate the screw, not the ring around it.)

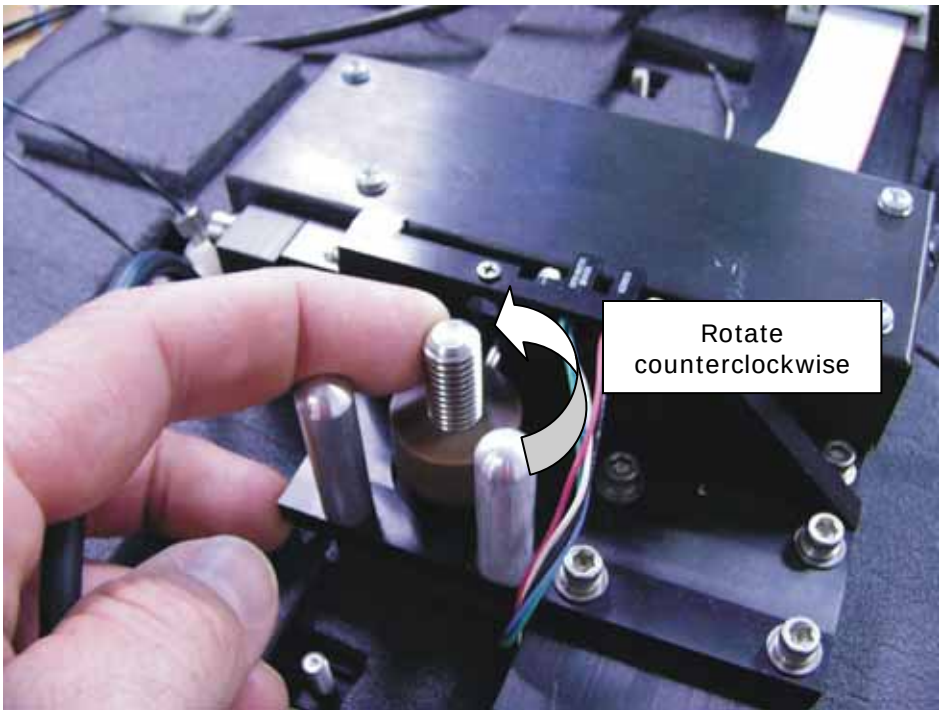

6. Gently lift the left side of the incubator housing and carefully slide it out.

Note:

When replacing the incubator housing, the two "forks" on its right side should wrap around the holding screws.

The forks should not slide under the fixed foam housing.

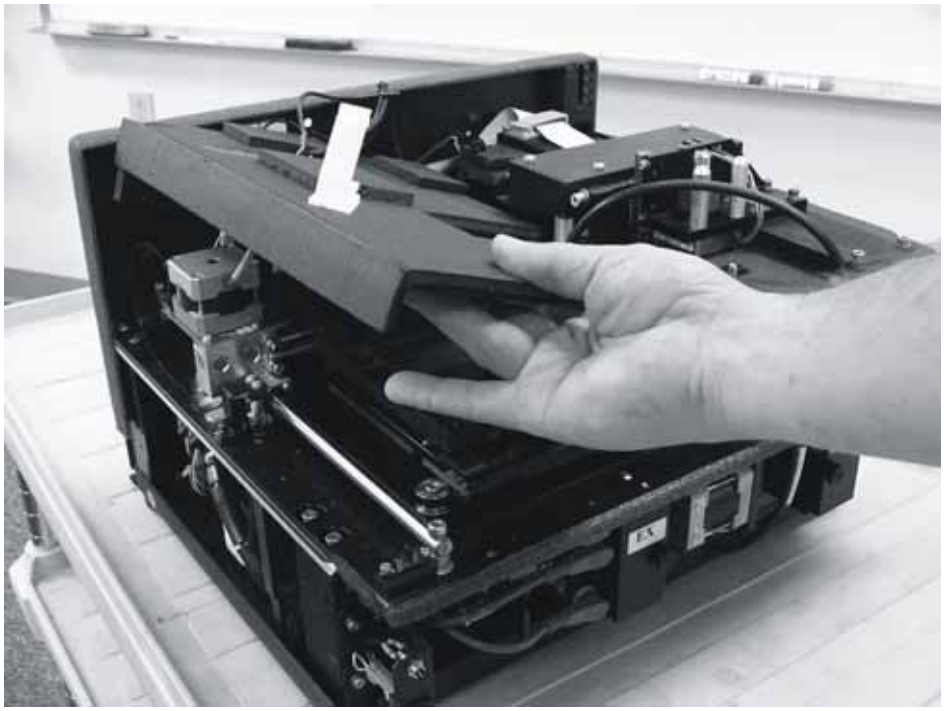

7. Use a 1/8” Allen wrench to remove the top optical probe’s holding screw.

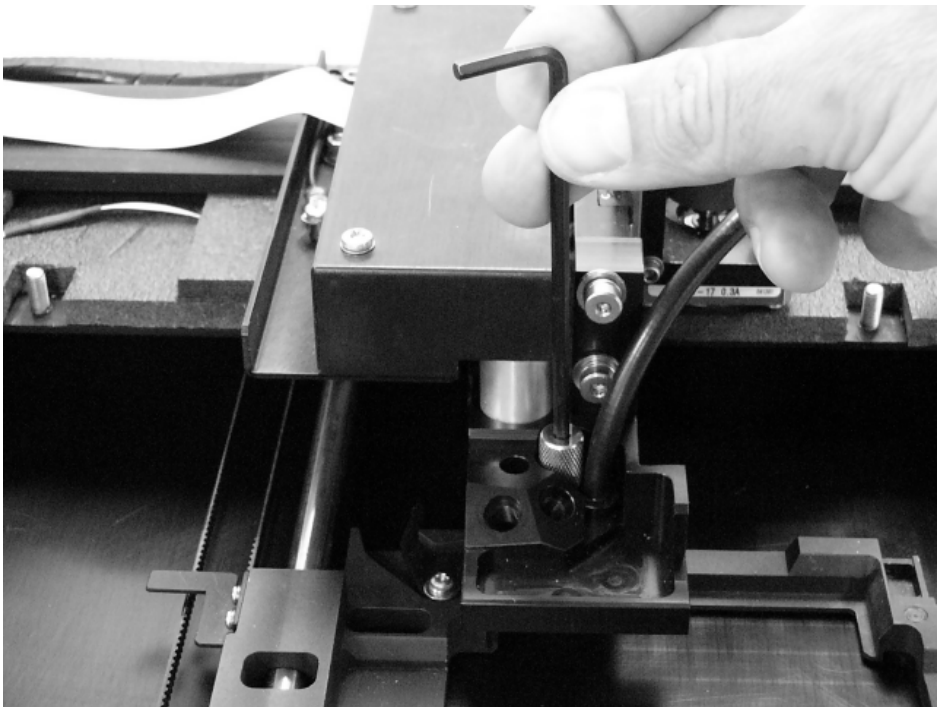

8. Gently pull the optical probe up and out of its socket to expose it for cleaning. Soak the probe in alcohol for one minute **maximum**. Wipe with lens-cleaning tissue and set aside.

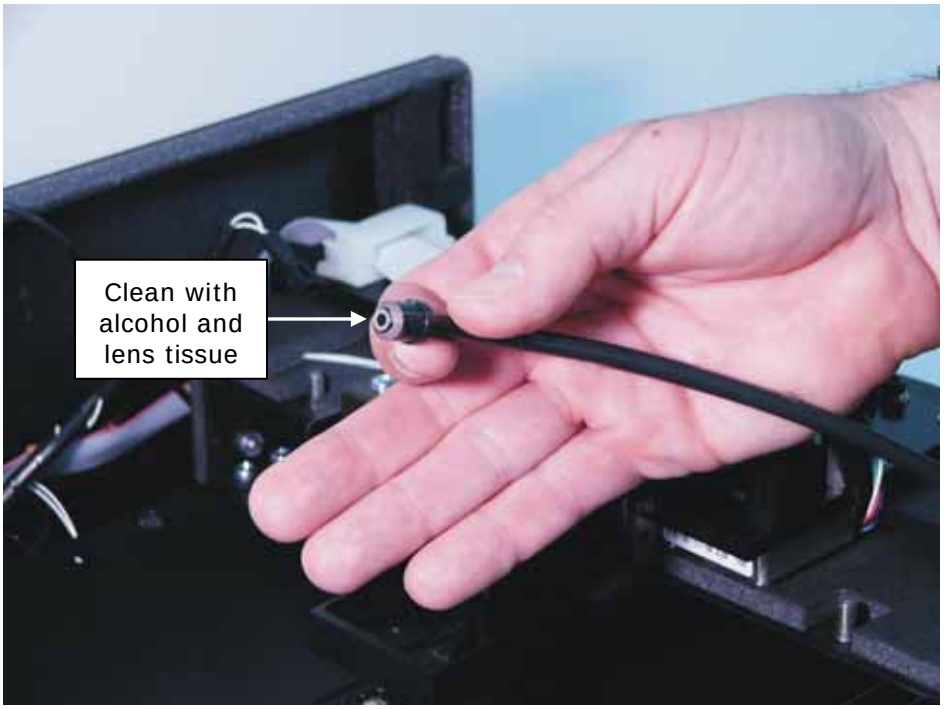

9. Use a 3/32” Allen wrench to remove the two shoulder screws securing the top probe hanger. Remove the screws and set them aside.

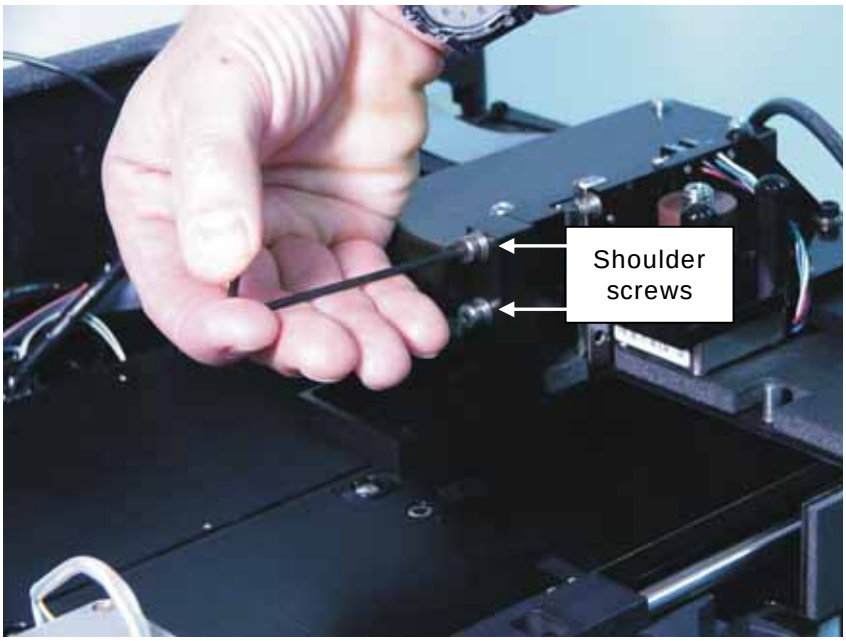

10. Drop the top probe hanger down and slide to the left to remove it. Turn the hanger upside down to clean the absorbance lens (see instructions on the next page). **Do not touch the lens with your fingers!** Inspect the block for spills or other contamination. *Carefully* clean with mild detergent if necessary.

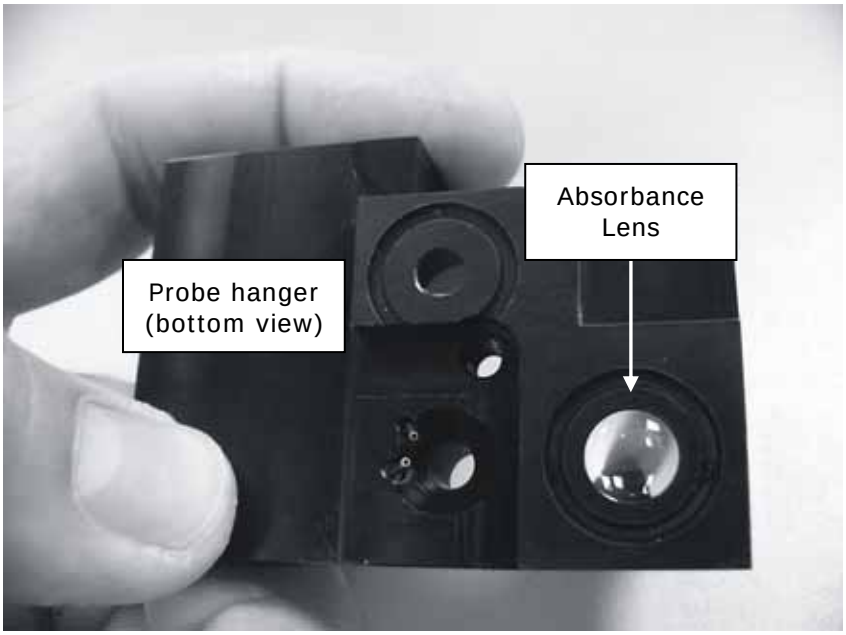

❖ **Important!** When cleaning the absorbance lens with the swab, apply very little pressure to the lens! Applying too much pressure can push the lens out of its holder; reinstallation must be performed by BioTek service personnel. If the lens does fall out, contact BioTek TAC.

11. Use a cotton swab moistened with alcohol to **gently** clean the lens on the top probe hanger.

12. Slide the microplate carrier out of the way. Use a cotton swab moistened with alcohol to clean the lens on the instrument surface.

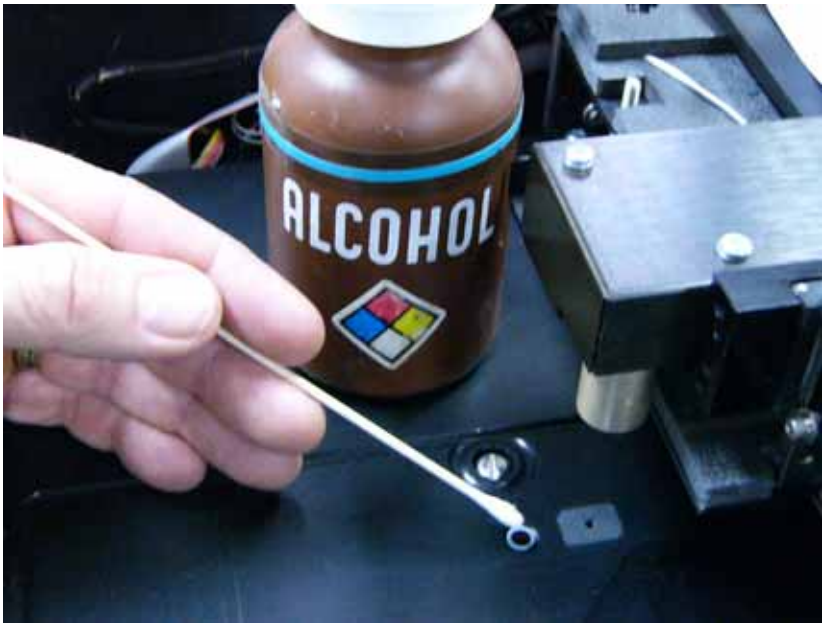

Cleaning the Reader's Internal Surface

1. If you have not already done so, unplug the instrument and remove its shroud (see page 135 for instructions). Follow the instructions under ***Cleaning the Optical Probes*** to (at a minimum) disconnect the incubator wires, detach the ground wire, lower the top optic probe hanger, and remove the incubator housing (steps 1 through 6).
2. Manually slide the microplate carrier to the left to engage the support pin, and then away from the center surface.

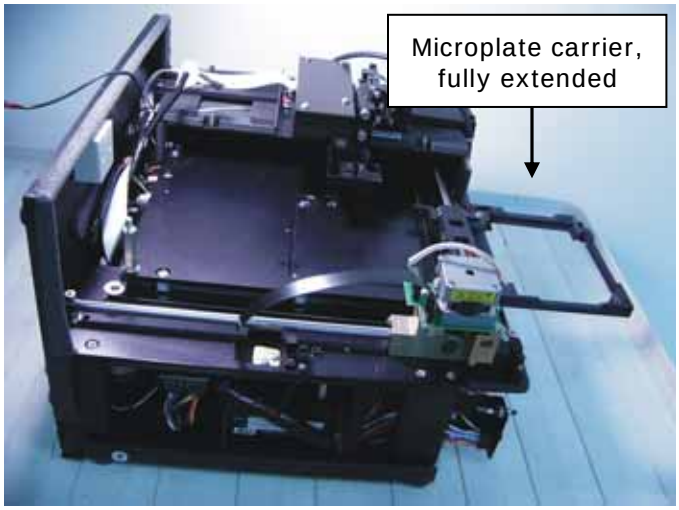

3. Moisten (**do not soak**) a clean cotton cloth with alcohol, water, or with water and mild detergent. Wipe all sides of the plate carrier. Wipe the instrument's horizontal surface.

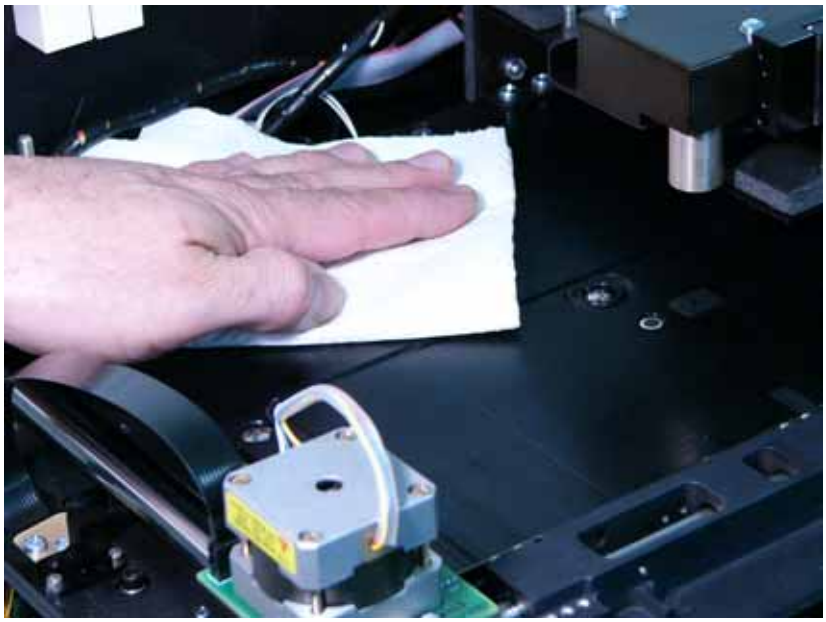

4. If detergent was used, wipe the surfaces with a cloth moistened with water.
5. Use a clean, dry, lint-free cloth to dry all wet surfaces.

Reassembling the Components

Perform these steps in the order listed to reassemble the components. Refer to the page numbers shown for further instructions and photos demonstrating the steps.

1. Slide the **microplate carrier** back into the instrument, p. 149.
2. Insert the two injector heads into their sockets in the top probe hanger. **Do not touch the absorbance lens with your fingers!** Ensure that the injector heads are properly seated in the hanger. The knurled plastic should sit flush against the hanger surface, as shown below.

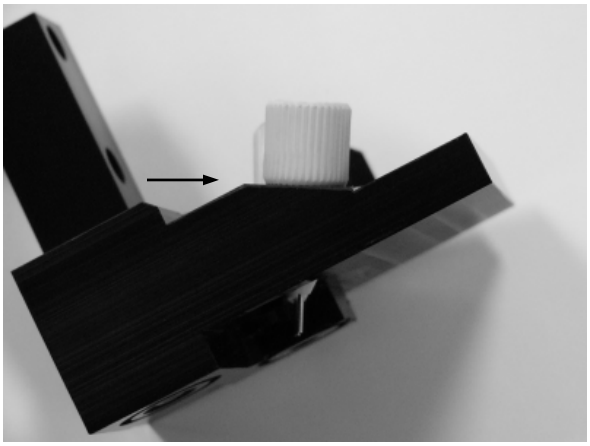

3. Attach the two internal dispense tubes to the injector heads, as shown below. **Do not overtighten the thumbscrews!**

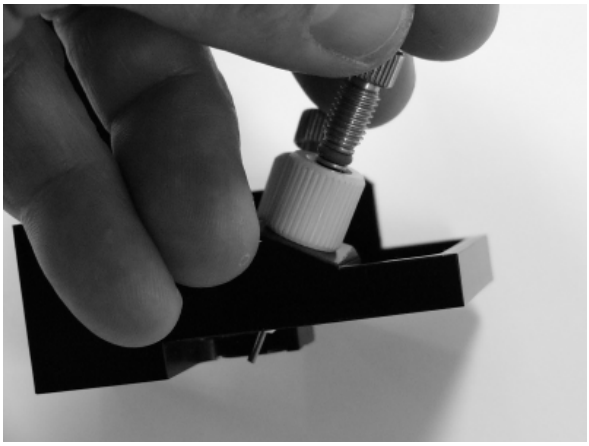

Continued on the next page.

Here is the top probe hanger ready for reinstallation, with injector heads and internal dispense tubes attached:

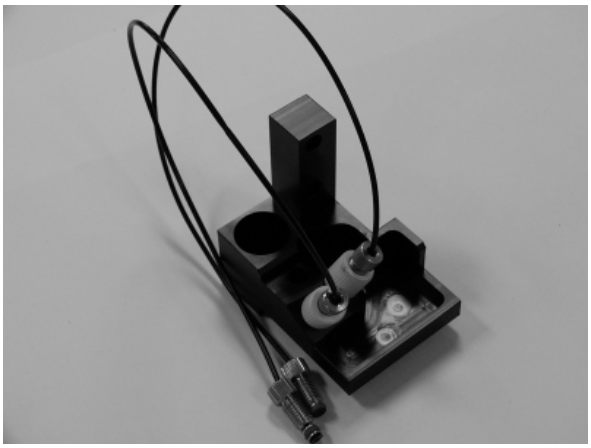

4. Replace the **top probe hanger** and shoulder screws (using the 3/32” Allen wrench), p. 147.
5. Insert the **top optic probe** into its socket and replace its holding screw (using the 1/8” Allen wrench), p. 146.
6. Replace the **incubator housing** and two thumbscrews, p. 145 and 144. Do not slide the two “forks” on the housing’s right side *under* the fixed foam housing.
7. Replace the **groundwire** and its thumbscrew, p. 143.
8. Reconnect the **heater** and **thermistor wires**, p. 143. Be sure to connect wires of the same color.
9. Attach the **two internal dispense tubes** to the tubing **ports**, taking care to align the correct port with the correct injector head, p. 138.
10. Slide the two internal dispense tubes into the **cable clamp** and close the clamp, p. 138.
11. **Review** the steps you just performed to make sure the components have been properly reassembled.
12. Slide the **shroud** onto the instrument, p. 136.
13. Replace the four Phillips-head **screws** to securely attach the shroud to the base, p. 135.

Performance Check

After reassembling the instrument, perform the following to verify that the instrument is functioning properly:

- Plug the instrument in and turn it on; allow its run-time system test to complete. Run a System Test through Gen5™ or KC4™.
- Run any required OQ/PQ tests.

Appendix A

Decontamination

This appendix contains procedures for decontaminating all models of the Synergy™ HT.

Purpose 154
Required Materials.....155
Procedure for Models without Injectors.....156
Routine Procedure for Models With Injectors 157
Clean Exposed Surfaces.....157
Decontaminate the Fluid Lines 158
Rinse the Fluid Lines 159
Clean the Internal Tubing and Injector Heads 159
Clean the Tip Priming Trough and Priming Plate 160
Alternate Procedure for Models with Injectors.....161

Purpose

Any laboratory instrument that has been used for research or clinical analysis is considered a biohazard and requires decontamination prior to handling.

Decontamination minimizes the risk to all who come into contact with the instrument during shipping, handling, and servicing. Decontamination is required by the U.S. Department of Transportation regulations.

Persons performing the decontamination process must be familiar with the basic setup and operation of the instrument.

ⓘ	BioTek Instruments, Inc. recommends the use of the following decontamination solutions and methods based on our knowledge of the instrument and recommendations of the Centers for Disease Control and Prevention (CDC). Neither BioTek nor the CDC assumes any liability for the adequacy of these solutions and methods. Each laboratory must ensure that decontamination procedures are adequate for the Biohazard(s) they handle.
⚠	Wear prophylactic gloves when handling contaminated instruments. Gloved hands should be considered contaminated at all times; keep gloved hands away from eyes, mouth, and nose. Eating and drinking while decontaminating instruments is not advised.
⚠	Mucous membranes are considered prime entry routes for infectious agents. Wear eye protection and a surgical mask when there is a possibility of aerosol contamination. Intact skin is generally considered an effective barrier against infectious organisms; however, small abrasions and cuts may not always be visible. Wear protective gloves when performing the decontamination procedure.

Required Materials

For all Synergy™ HT models:

- Sodium hypochlorite (NaClO, or bleach)
- 70% isopropyl alcohol (as an alternative to bleach)
- Deionized or distilled water
- Safety glasses
- Surgical mask
- Protective gloves
- Lab coat
- Biohazard trash bags
- 125 ml beakers
- Clean, lint-free cotton cloths

Additional materials for models with injectors:

- Phillips-head screwdriver
- Small brush for cleaning the tip priming trough and priming plate
- (Optional) Mild detergent

Procedure for Models without Injectors

⚠	The **sodium hypochlorite (bleach)** solution is caustic; wear gloves and eye protection when handling the solution. Do not immerse the instrument, spray it with liquid, or use a "wet" cloth. Do not allow the cleaning solution to run into the interior of the instrument. If this happens, contact the BioTek Service Department.
ⓘ	**Important!** Turn off and unplug the instrument for all decontamination and cleaning operations.

1. Turn off and unplug the instrument.
2. Prepare an aqueous solution of 0.50% sodium hypochlorite (bleach). As an alternative, 70% isopropyl alcohol may be used if the effects of bleach are a concern.

❖ Be sure to check the percent NaClO of the bleach you are using; this information is printed on the side of the bottle. Commercial bleach is typically 10.0% NaClO; if this is the case, prepare a 1:20 dilution. Household bleach is typically 5.0% NaClO; if this is the case, prepare a 1:10 dilution.

3. Moisten a cloth with the bleach solution or alcohol. **Do not soak the cloth.**
4. Manually open the plate carrier door; slide out the plate carrier.
5. Wipe the plate carrier and all exposed surfaces of the instrument.
6. Wait 20 minutes. Moisten a cloth with deionized (DI) or distilled water and wipe all surfaces of the instrument that have been cleaned with the bleach solution or alcohol.
7. Use a clean, dry cloth to dry all wet surfaces.
8. Reassemble the instrument as necessary.
9. Discard the used gloves and cloths using a Biohazard trash bag and an approved Biohazard container.

Routine Procedure for Models With Injectors

❖ **Note:** Perform this ***Routine Procedure*** when all systems are functioning normally on the Synergy™ HT with Injectors. If you are unable to prime the Synergy HT due to a system failure, perform the ***Alternate Procedure*** described on page 161.

If disinfecting with sodium hypochlorite (bleach), be sure to flush repeatedly with deionized water to ensure that no bleach is carried over. After disinfecting with sodium hypochlorite, perform the rinse procedure provided on page 159.

If disinfecting with alcohol, do not immediately prime with deionized water, because the drying effect of the alcohol is an important aspect of its disinfectant properties.

Clean Exposed Surfaces

1. Turn off and unplug the instrument.
2. Prepare an aqueous solution of 0.50% sodium hypochlorite (bleach). As an alternative, 70% isopropyl alcohol may be used if the effects of bleach are a concern.

❖ Be sure to check the percent NaClO of the bleach you are using; this information is printed on the side of the bottle. Commercial bleach is typically 10.0% NaClO; if this is the case, prepare a 1:20 dilution. Household bleach is typically 5.0% NaClO; if this is the case, prepare a 1:10 dilution.

3. Manually open the plate carrier door; slide out the plate carrier.
4. Moisten a cloth with the bleach solution or alcohol. **Do not soak the cloth.**
5. Wipe the plate carrier and the exposed surfaces of the external dispense module.
6. Wait 20 minutes. Moisten a cloth with deionized (DI) or distilled water and wipe all surfaces that have been cleaned with the bleach solution or alcohol.
7. Use a clean, dry cloth to dry all wet surfaces.

Continued on the next page.

8. Reassemble the instrument as necessary.
9. If the dispense module is installed, detach the outlet tubes from the rear panel of the instrument. If it is not installed, attach just the dispense module's communication cable to the instrument. Remove the supply bottles and their holders.
10. Perform the procedures described below through page 160 to decontaminate the fluid lines in the dispense module, the internal tubing and injector heads, and the tip priming trough and priming plate.

Decontaminate the Fluid Lines

1. Place a beaker with 20 ml of 0.5% sodium hypochlorite solution or 70% isopropyl alcohol near **SYRINGE 1** on the dispense module.
2. Place the SYRINGE 1 **inlet tube** in the beaker.
3. If you have not already done so, detach the dispense module's **outlet tubes** from the instrument's rear panel. Place the ends of the outlet tubes in an empty beaker and set the beaker on the work surface.
4. Launch Gen5™ or KC4™, select **System|Reader Control,** and click the **Dispenser** tab.
5. Select **Dispenser 1**, enter a **Volume** of **5000 µl**, and keep the default dispense **Rate.**
6. Place the **priming plate** on the carrier (it is not used, but the reader requires its presence).
7. Run **two** prime cycles, for a total of 10000 µl.
8. Pause for **20 to 30 minutes** to allow the solution to disinfect the tubing.
9. Remove the **inlet tube** from the beaker of disinfectant solution.
10. From the **Reader Control** dialog, change the **Volume** to **1000 µl.**
11. Run **one** prime cycle, to flush the disinfectant out of the fluid lines.
12. **Empty** the beaker containing the outlet tubes. Put the tubes back in.
13. Important! If sodium hypochlorite (bleach) was used, perform ***Rinse the Fluid Lines*** on the next page.

    Otherwise, (or after performing the Rinse procedure), repeat steps 1-13 for **SYRINGE 2** / **Dispenser 2**.

Rinse the Fluid Lines

Perform this procedure only if decontamination was performed using sodium hypochlorite.

1. Place a beaker containing at least 30 ml of deionized water on the dispense module.
2. Place the SYRINGE 1 or 2 **inlet tube** in the beaker.
3. If you have not already done so, place the **outlet tubes** in an empty beaker.
4. From the **Reader Control** dialog, select **Dispenser 1** or **2**, set the **Volume** to **5000 µl**, and keep the default dispense **Rate**.
5. Run **five** prime cycles, for a total of 25000 µl.
6. Pause for **10 minutes** and then run **one** prime cycle with 5000 µl. This delay will allow any residual sodium hypochlorite to diffuse into the solution and be flushed out with the next prime.
7. **Empty** the beaker containing the outlet tubes.
8. Wipe all surfaces with deionized water.
9. Discard the used gloves and cloths using a Biohazard trash bag and an approved Biohazard container.

Clean the Internal Tubing and Injector Heads

Turn to ***Chapter 5, Preventive Maintenance*** and perform the following procedures to access, remove, and clean the internal tubing and injector heads:

- ***Required Materials***
- ***Removing the Reader's Shroud***
- ***Removing the Internal Tubes and Injector Heads***
- ***Cleaning the Internal Tubes and Injector Heads***

When finished, replace the internal components and the reader's shroud.

Clean the Tip Priming Trough and Priming Plate

1. Remove the tip priming trough from the left rear of the instrument's microplate carrier (see below).
2. Wash the tip priming trough and priming plate in hot, soapy water. Use a small brush or cloth to clean the corners of the trough and plate.
3. **To decontaminate,** soak the trough and plate in a container of 0.5% sodium hypochlorite or 70% isopropyl alcohol for 20 to 30 minutes.
4. If decontaminating in **bleach** solution, remove the trough and plate, and thoroughly rinse with DI water.

   If decontaminating with **alcohol**, remove the trough and plate and let them air dry.
5. Discard the used gloves and cloths using a Biohazard trash bag and an approved Biohazard container.

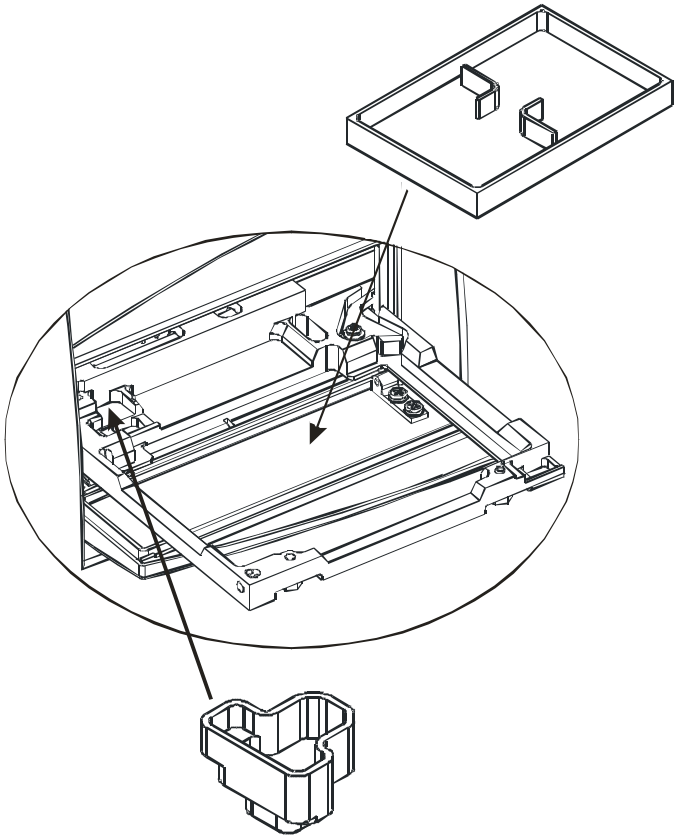

Figure 39: Tip priming trough and priming plate

Alternate Procedure for Models with Injectors

If you are unable to prime the Synergy™ HT due to a system failure, decontaminate the instrument and the Dispense Module as follows:

1. Turn to ***Chapter 5, Preventive Maintenance*** and perform the following procedures to remove the shroud and remove/clean the internal tubes and injector heads. When finished, leave the shroud off the reader and proceed to step 2 below.
   - ***Required Materials***
   - ***Removing the Reader's Shroud***
   - ***Removing the Internal Tubes and Injector Heads***
   - ***Cleaning the Internal Tubes and Injector Heads***
2. Prepare an aqueous solution of 0.50% sodium hypochlorite (bleach). As an alternative, 70% isopropyl alcohol may be used if the effects of bleach are a concern.

❖ Be sure to check the percent NaClO of the bleach you are using; this information is printed on the side of the bottle. Commercial bleach is typically 10.0% NaClO; if this is the case, prepare a 1:20 dilution. Household bleach is typically 5.0% NaClO; if this is the case, prepare a 1:10 dilution.

3. Slide the microplate carrier out of the instrument.
4. Moisten a cloth with the bleach solution or alcohol. **Do not soak the cloth.**
5. Use the cloth to wipe:
   - All surfaces of the shroud
   - All surfaces of the plate carrier
   - The instrument's rear panel
   - The exposed surfaces of the dispense module, including the syringe valves

Continued on the next page.

6. Remove the external tubing and the syringes from the dispense module and soak them in the bleach or alcohol solution. **Wait for 20 minutes.**

❖ **To remove the syringes:** Pull down the syringe bracket until it stops. Remove the metal thumbscrew from underneath the bracket. Unscrew the top of the syringe from the bottom of the syringe drive. Gently remove the syringe and store it in its original packaging (see ***Chapter 2, Installation***).

7. Moisten a cloth with DI or distilled water and wipe all surfaces that have been cleaned with the bleach solution or alcohol.
8. Rinse all tubing and the syringes with DI water.
9. Use a clean, dry cloth to dry all wet surfaces on the instrument and the Dispense module.
10. Reassemble the instrument and dispense module as necessary.
11. Discard the used gloves and cloths using a Biohazard trash bag and an approved Biohazard container.

Appendix B

Computer Control

The Synergy™ HT is completely computer-controlled; it is not equipped with a keypad or its own user interface. BioTek's Gen5™ and KC4™ software packages support all Synergy HT models and are used for both instrument control and data reduction.

For information on serial protocol commands and/or system integration, please contact your BioTek sales representative or BioTek Instruments, Inc.

Appendix C

Error Codes

This section lists and describes the possible error codes that may appear on the controlling PC.

Error Codes 166
Fatal Errors 167
Non-Fatal Errors 168
Home Sensor Initial Find Errors (0100-0307) 168
Home Sensor Verification Errors (0400-0409) 172
Saturation Errors (0500-0616) 174
Absorbance Reader Noise Errors (0700-0A16) 180
Internal Self-Test Errors (0D00-2918) 184
Other Errors (2A00-4000) 196
Status String Format 202

Error Codes

When an error occurs during operation with the Synergy™ HT, an **error code** will appear on the controlling PC. In the sample Gen5™ and KC4™ screens below, the error codes are **0201** and **2B0A**, respectively:

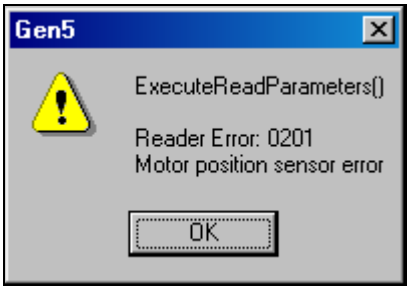

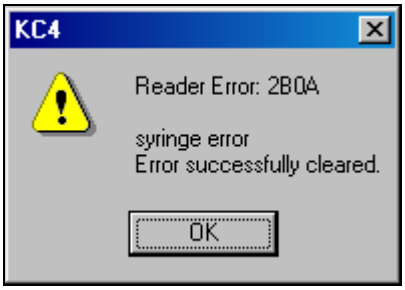

Error codes are represented as four-character identifiers. The first character will be 0, 1, 2, 3, 4, or A. For some error codes, the fourth character gives specific information related to the type of error.

- 0, 1, 2, 3, or 4 indicates a non-critical error, and the instrument will remain able to respond to commands. See ***Non-Fatal Errors*** starting on page 168 for more information. You can look up an error code to determine its probable cause.
- An "A" indicates a more serious error with the memory or processing. In this case, the instrument may be unable to respond; turn the instrument off and on again. You may be able to use the instrument after restarting it. See ***Fatal Errors*** on the next page.

If an error code is displayed, run a System Test for diagnostic purposes:

- If you're using Gen5, select **System|Diagnostics|Run System Test.**
- If you're using KC4, select **System|Diagnostics|Run Optics Test**.

> ❖ The error code tables in this manual serve a varied audience, which includes personnel equipped to service instruments. Use these tables to assist you with diagnosing problems, and solving them if possible. If you need help or more information, contact BioTek's Technical Assistance Center. See page 6 for contact information.
>
> ❖ For errors that are displayed during operation of the Synergy HT with the BioStack™ Microplate Stacker, refer to the BioStack Operator's Manual.

Fatal Errors

Fatal errors indicate conditions that require immediate attention. If a fatal error is displayed, contact BioTek's Technical Assistance Center for further instructions.

Code	Description
A100	**Task control block not available**
A200	**Read already in progress**
A300	**Motor not available** This error indicates that a motor is not available but it does not identify which motor was requested.
A301	**Real-time clock not available**
A302	**Display device not available**
A304	**T0 device not available** Timer 0, in addition to being used by the motors, is also used in microsecond timing for time-resolved measurements.
A400	**Failed code checksum test on power-up**
A500	**DR steps alloc/free error <assay number>** (This error indicates old basecode; recommend upgrading)
A502	**24V power dropped below safe level**
A600	**Data flash write timed out**
A700	**Data flash read back did not match write**
A800	**Code flash write timed out**
A900	**Memory allocation heap corrupted**
AA01	**Absorbance A/D converter did not see the Ready signal** (This error indicates old basecode; recommend upgrading)
AA02	**Fluorescence A/D Converter did not see the Ready signal** (This error indicates old basecode; recommend upgrading) **Probable Causes:** • PMT detector PCB (AA02) • Analog PCB (AA01) • Motor/Power PCB (AA01 or AA02)

Non-Fatal Errors

Non-fatal errors indicate non-fatal conditions that require attention. The last digit of some error codes gives specific information related to the type of error. For example, in the Home Sensor Initial Find Errors table that follows, the last digit indicates which sensor was in error.

❖ **Note:** The errors presented in the following tables are common to multiple reader instruments, and may not all be applicable to any single given reader.

Home Sensor Initial Find Errors (0100-0307)

These errors occur when the optical sensor for the axis in question never electrically transitions from a high state to a low state. The causes can range from a simple disconnected cable, obstructed axis (plate or shipping screw limiting travel), or a defective sensor. The last digit of the error identifies the axis.

Code	Description and Probable Causes:
0100	**Abort Error** This error indicates that the read or task has been aborted.
0101	**Abort Error** This error indicates that the read or task has been aborted. 0101 indicates that the abort was a software abort. **Possible Causes** • User aborted read from Gen5™ or KC4™. • User aborted from another serial interface.
0200	**X-axis motor did not find the home opto sensor transition** This error indicates that a motor was not able to move to its "home" position as registered by feedback from an optical sensor. **Note:** This error does not look for the mid or XY sensor. See 2A01 for mid sensor. See 2400 for XY sensor. **Probable Causes:** • X-axis rail is dirty where the nylon slider bushings are worn and causing too much friction, or dirt in roller bearings causing bearings to jam. • The support pin on the carrier has moved, preventing it from properly sitting between the two roller bearings on the bearing block. • Defective or broken optical sensor. • Defective Motor Controller PCB. • Carrier front support screws are not adjusted or are worn, causing the carrier to no longer be level. The support pin is no longer inserting properly into the roller bearings. • X-axis PCB is not adequately adjusted to the right, and will not allow the flag to enter the opto sensor enough to trip the sensor. Loosen the two screws and slide the PCB to the right and retighten. Run the carrier autocal for both absorbance and fluorescence. • Carrier is not able to move into read chamber. An object may be obstructing the carrier's path. • See Field Change Notice L0030.

Code	Description and Probable Causes:
0201	**Y-axis motor did not find the home opto sensor transition** This error indicates that a motor was not able to move to its "home" position as registered by feedback from an optical sensor. **Note:** The mid or XY sensor may cause an 0201 error. See 2A01 for mid sensor, see 2400 for XY sensor. **Probable Causes:** • Y-axis rails are where the bearings are dirty and worn, and causing too much friction. • Defective or broken optical sensor. • If the Synergy is run with the wrong 24 Volt supply (48W instead of 100W) a user will experience Y-axis errors (error code 0201) when reading a plate using incubation. This is because the supply is not large enough to handle running the incubator and motors simultaneously. • Defective Motor Controller PCB or cable. • Carrier not able to move into the read chamber. An object may be obstructing the carrier's path.
0202	**EX Filter Wheel did not home** **Probable Causes:** • Filter wheel is not inserted into to the EX assembly. • Filter wheel is not moving due to an obstruction, or because the filter is not clipped in. • Filter wheel is not moving because gear teeth on the filter wheel are binding with the gear teeth on the motor. • Defective or broken Hall Effect sensor. • Defective Motor Controller PCB or cable. • Motors failed due to the bearings.
0203	**EM Filter Wheel did not Home** **Probable Causes:** • Filter wheel is not inserted into the EM assembly. • Filter wheel is not moving due to an obstruction, or because the filter is not clipped in. • Filter wheel is not moving because the gear teeth on the filter wheel are binding with the gear teeth on the motor. • Defective or broken Hall Effect sensor. • Defective Motor Controller PCB or cable. • Motors failed due to the bearings.
0204	**Monochromator Filter Wheel did not home (order-sorting filters)** **Probable Causes:** • Filter wheel is not tight, and wobbles. • Filter wheel is not moving because it is too close to the motor gear and is binding. • Defective or broken optical sensor. • Defective motor, Motor Controller PCB, or cable. • Motors failed due to the bearings.

Code	Description and Probable Causes:
0206	**Z-axis (Top Probe) did not home** **Probable Causes:** • The optical trigger flag has moved or is loose. • A heavy object is on top of the reader causing the case to interfere with the z-axis travel. • The lead screw is loose on the motor shaft because the glue is no longer bonding it to the motor shaft. (Reference Field Change Notice L0031.) • Defective or broken optical sensor. • Fiber-optic cable is not tied to the upper probe assembly and has moved into the top probe's path, not allowing the top probe to reach the optical sensor. • Defective motor, Motor Controller PCB, or cable. • Upper absorbance lens is loose and has rotated 90 degrees, thus jamming the lens into the photodiode. Damage to the photodiode can occur.
0207	**Probe Changer did not home** **Probable Causes:** • Defective optical sensor. • Defective motor, Motor Controller PCB, or cable. • The probe changer assembly is not able to move because a foreign object is preventing the movement.
0208	**Syringe 0 did not home (also known as the first syringe drive)** **Probable Causes:** • Linear way is dirty, or lack of lubrication is causing the bearings to jam. • The lead screw is loose on the motor shaft because the glue is no longer bonding it to the motor shaft. • Defective optical sensor. • Defective motor, Motor Controller PCB, or cable. • Cable between the dispenser and the Synergy is defective, too long, or there is a lost connection. • For certain older dispensers, opto cable 7330506 may need to be replaced with 7120734.
0209	**Syringe 1 did not home (also known as the second syringe drive)** **Probable Causes:** • Linear way is dirty, or lack of lubrication is causing the bearings to jam. • The lead screw is loose on the motor shaft because the glue is no longer bonding it to the motor shaft. • Defective optical sensor. • Defective motor, Motor Controller PCB, or cable. • Cable between the dispenser and the Synergy is defective, too long, or there is a lost connection. • For certain older dispensers, opto cable 7330506 may need to be replaced with 7120734.

Code	Description and Probable Causes:
0300	**Saturation transition failed in the X-axis movement (light beam never found)** This error indicates that during the X-axis movement, the light beam (saturation) transition (max light to no light) was never found during autocalibration. **Probable Causes:** Absorbance mode: • The rail, nylon bushings, or bearings are dirty, causing the carrier to jam. • The Autocal jig is not in the carrier. • Order-sorting filter wheel is jammed and is not able to turn to the open hole. Fluorescence mode: • The rail, nylon bushings, or bearings are dirty. • The Autocal jig is not in the carrier, or mirrors are facing the wrong direction.
0301	**Saturation transition failed in the Y-axis movement (light beam never found)** This error indicates that during the Y-axis movement, the light beam (saturation) transition (max light to no light) was never found. **Probable Causes:** Absorbance mode: • The rail, nylon bushings, or bearings are dirty, causing the carrier to jam. • The Autocal jig is not in the carrier. • Order-sorting filter wheel is jammed and is not able to turn to the open hole. Fluorescence mode: • The rail, nylon bushings, or bearings are dirty. • The Autocal jig is not in the carrier, or mirrors are facing the wrong direction.
0302/ 0303	**EX/EM filter wheel did not home** (This error code indicates older basecode. Recommend upgrading.) This error indicates the filter wheel did not rotate to activate the Hall Effect home sensor. **Probable Causes:** • The Filter Wheel is removed when the instrument is powered on and the wheel positioning is changed. • The filter wheel is jammed. Reseating the filter wheel may correct this.
0304	**Monochromator order-sorting filter wheel did not home** This error is caused when the Order-sorting Filter Wheel cannot rotate to the home sensor position. **Probable Causes:** • The motor or motor driver circuit is defective. • The home sensor or sensor circuit is defective.

Code	Description and Probable Causes:
0305	**Saturation transition failed in the Monochromator motor movement (light beam never found)** During the instrument initialization, the monochromator is homed by rotating the monochromator mirror until the white light (full light) is detected. This requires a fully functional Flash lamp/detection system. **Probable Causes:** • Defective Analog PCB. • Defective Flash Lamp and or Flash Lamp Power Supply. (Inconsistent flashes; high probability.) • Defective motor/Power PCB. • Defective monochromator (low probability). • Order sorting filter wheel motor failed due to the bearings. The filter wheel does not move to the open hold, allowing the monochromator to find home.
0306	**Probe height (Z) axis did not find home** (This error code indicates old basecode. Recommend upgrading.) **Probable Causes:** • The optical flag is not adjusted properly. • The Z-axis lead screw is no longer glued to the motor shaft. • The upper fiber bundle is hitting the top of the shroud due to not being properly tied down.
0307	**Probe changer motor did not find home** (This error code indicates old basecode. Recommend upgrading.) **Probable Causes:** • An obstruction is preventing the motor from moving. • The motor and/or motor drive circuit is defective. • The sensor and/or sensor circuit defective.

Home Sensor Verification Errors (0400-0409)

These errors occur when the optical sensor is not found again within a range of where it was last found. The causes can range from loose transmission components to marginal adjustments. The last digit of the error identifies the axis in question.

Code	Description and Probable Causes:
0400	**Carrier X-axis failed positional verify** X-axis motor failed to get to the same position when moved a known number of steps from the home position and back. **Probable Causes:** • The optical trigger flag has moved or is loose. • Dirty rail, nylon bushings, or bearings. • Carrier support pin is out of adjustment. • Reference Field Change Notice L0030.

Code	Description and Probable Causes:
0401	**Carrier Y-axis failed positional verify** Y-axis motor failed to get to the same position when moved a known number of steps from the home position and back. **Probable Causes:** • The optical trigger flag has moved or is loose. • Foreign object in the path of the carrier. • Dirty rail and bearings.
0402	**EX filter wheel failed positional verify** **Probable Causes:** • The filter cartridge was removed and then reseated when the instrument was powered up. Running the system test will clear this error. • Filter wheel is binding against the motor gear. • Motors failed due to the bearings.
0403	**EM Filter Wheel failed positional verify** **Probable Causes:** • The filter cartridge was removed and then reseated when the instrument was powered up. Running the system test will clear this error. • Filter wheel is binding against the motor gear. • Motors failed due to the bearings.
0404	**Monochromator Filter Wheel failed positional verify (order-sorting filters)** **Probable Causes:** • The optical trigger flag has moved or is loose. • Filter wheel is binding against the motor gear. • Motors failed due to the bearings.
0405	**Monochromator failed to find the zero order position. (White light or positional verify)** The order-sorting filter wheel is homed and moved to the open hole position. The monochromator is moved until the optical system detects saturation. It is then moved to the point where there is no saturation and then moved back to the saturation point. This error is indicating the saturation did not clear or appear. **Probable Causes:** • Flash lamp is missing flashes or is not flashing. • The optic system does not detect the saturation (Analog PCB). • Order-sorting filter wheel is binding against the motor gear, not allowing the open hole to line up correctly. • Order-sorting filter motor failed due to the bearings. • Bearings within the grating mirror are causing the monochromator to jam.
0406	**Z-axis (Top Probe) failed position verify** **Probable Causes:** • The optical trigger flag has moved or is loose. • The lead screw is loose on the motor shaft because the glue is no longer bonding it to the motor shaft. Reference Field Change Notice L0031. • Fiber-optic cable is not tied to the upper probe assembly, and has moved into the top probe's path, not allowing the top probe to reach the optical sensor.

Code	Description and Probable Causes:
0407	**Probe Changer failed position verify** **Probable Causes:** • The optical trigger flag has moved or is loose. • The probe changer assembly is not allowed to move due to a foreign object preventing its movement.
0408	**Syringe 0 failed position verify (also known as the first syringe drive)** **Probable Causes:** • The optical trigger flag has moved, is loose, or has intermittently failed. • For certain older dispensers, opto cable 7330506 may need to be replaced with 7120734. • The linear way and bearings are dirty or lack sufficient grease. • The lead screw is loose on the motor shaft because the glue is no longer bonding it to the motor shaft. • The assembly is not able to move because a foreign object is preventing the movement.
0409	**Syringe 1 failed position verify (also known as the second syringe drive)** **Probable Causes:** • The optical trigger flag has moved, is loose, or has intermittently failed. • For certain older dispensers, opto cable 7330506 may need to be replaced with 7120734. • The linear way and bearings are dirty or lack sufficient grease. • The lead screw is loose on the motor shaft because the glue is no longer bonding it to the motor shaft. • The assembly is not able to move because a foreign object is preventing the movement.

Saturation Errors (0500-0616)

These errors occur in several places when the measurement channel in use is found to be in an unexpected saturation condition. The error decoding is complex and requires some orientation in terms of where the failure occurs. The correct identification will depend on listening to the unit function prior to the reported error. For example, if the monochromator motor were in motion during a self-check, a 0500 error would indicate an ABS measurement channel error. A 0501 error would represent an absorbance reference channel. If the fluorometric measurement system is in use (filter wheels homing), a 0500 error could indicate a missing filter. In this case, a 0501 would indicate a missing filter in position 1 of the wheel, which was last homing prior to the error condition being detected.

Code	Description and Probable Causes:
0500	**Light beam saturated (too much light). Air reading reached 65535 or PMT Relative Fluorescing Units (RFU) reached FFFF (99999).** This error can indicate one of the following scenarios: • (1) During an absorbance filter calibration or wavelength scan, the reference channel is saturated when storing to memory. • (2) During a fluorescence-dispensing read, after dispensing, the read times-out due to the sample saturating the PMT. • (3) During a spectral scan read, the reference channel reached saturation at one or more of the selected wavelengths. • (4) During fluorescence autocalibration, the light level did not reduce to more than half the saturation light level when the carrier was moved away from center. **Probable Causes:** Scenario 2 (fluorescence-dispensing read): • Incorrect chemistry was dispensed into the well. Scenarios 1 and 3 (spectral scan): • Monochromator has a defect in the mirror gradients. • Absorbance analog PCB intermittently failed. • Order-sorting filter wheel is jammed, not aligning the correct bandpass filter with the light path, or the through hole is allowing white light to pass. • Voltage to the lamp has increased due to failure of the lamp power supply, or the motor power supply PCB sent the wrong voltage request to the lamp power supply. Scenario 4 (fluorescence autocalibration): • The surface of the autocalibration jig is too reflective. Return the jig to BioTek for a replacement jig. • The carrier did not move far enough to block the light beam. Troubleshoot the carrier movement.
0501	**Light beam saturated (light). Air measurement channel reading reached 65535 or PMT Relative Fluorescing Units (RFU) reached FFFF (99999).** This error can indicate one of the following scenarios: • (1) Prior to a fluorescence read or during a system test, the PMT is tested for operation; the gain is set at 153. Is the PMT operating properly? • (2) The PMT is constantly being checked for an overload condition. • (3) During a spectral scan read, the measurement channel reached saturation at one or more of the selected wavelengths. • (4) Filter 1 in absorbance mode has saturated the measurement channel. **Probable Causes:** Scenarios 1 and 2 (fluorescence or system test): • The PMT is defective. • The connector from the PMT base to the analog board is defective. The ground/shield is not grounding properly. • The PMT base is defective. • The PMT analog PCB is defective. Scenario 3 (Spectral scan read): • The monochromator mirror/grating is damaged. • Absorbance analog PCB intermittently failed. • Order-sorting filter wheel is jammed, not aligning the correct bandpass filter with the light path, or the through hole is allowing white light to pass. • Missed flashes or an erratic flash lamp. • Voltage to the lamp has increased due to failure of the lamp power supply, or the motor

Code	Description and Probable Causes:
	power supply PCB sent the wrong voltage request to the lamp power supply. Scenario 4 (Reference channel): • The monochromator mirror/grating is damaged. • Absorbance analog PCB intermittently failed. • Missed flashes or an erratic flash lamp. • Order-sorting filter wheel is jammed, not aligning the correct bandpass filter with the light path, or the through hole is allowing white light to pass. • Voltage to lamp has increased due to failure of the lamp power supply, or motor power supply PCB sent the wrong voltage request to the lamp power supply.
0502	**Light beam saturated (too much light). Air measurement channel reading reached 65535 or PMT Relative Fluorescing Units (RFU) reached FFFF (99999).** This error can indicate one of the following scenarios: • (1) Prior to a fluorescence read or during a system test, the PMT is tested for operation; the gain is set at 102. Is the PMT operating properly? • (2) Filter 2 in absorbance mode has saturated the reference channel. **Probable Causes:** Scenario 1 (Fluorescence or System test): • The PMT is defective. • The connector from the PMT base to the analog board was not built correctly. The ground/shield is not grounding properly. • The PMT base is defective. • The PMT analog PCB is defective. Scenario 2 (Reference channel): • The monochromator mirror/grating is damaged. • Absorbance analog PCB has intermittently failed. • Order-sorting filter wheel is jammed, not aligning the correct bandpass filter with the light path, or the through hole is allowing white light to pass. • Missed flashes or an erratic flash lamp. • Voltage to the lamp has increased due to failure of the lamp power supply, or the motor power supply PCB sent the wrong voltage request to the lamp power supply.
0503	**Light beam saturated (too much light). Air reading reached 65535.** This error indicates that filter 3 in absorbance mode has saturated the reference channel. **Probable Causes:** • The monochromator mirror/grating is damaged. • Absorbance analog PCB intermittently failed. • Missed flashes or an erratic flash lamp. • Order-sorting filter wheel is jammed, not aligning the correct bandpass filter with the light path, or the through hole is allowing white light to pass. • Voltage to the lamp has increased due to failure of the lamp power supply, or the motor power supply PCB sent the wrong voltage request to the lamp power supply.

Code	Description and Probable Causes:
0504	**Light beam saturated (too much light). Air measurement channel reading reached 65535.** This error indicates that filter 4 in absorbance mode has saturated the reference channel. **Probable Causes:** • The monochromator mirror/grating is damaged. • Absorbance analog PCB has intermittently failed. • Missed flashes or an erratic flash lamp. • Order-sorting filter wheel is jammed, not aligning the correct bandpass filter with the light path, or the through hole is allowing white light to pass. • Voltage to the lamp has increased due to failure of the lamp power supply, or the motor power supply PCB sent the wrong voltage request to the lamp power supply.
0505	**Measurement channel light beam saturated (too much light)** **Fail if > 3 steps of error.** This error can indicate one of the following scenarios: • (1) When the monochromator is trying to find the center of the white light (home position), the monochromator is not able to find home, or it found home somewhere other than where it found home before. • (2) Filter 5 in absorbance mode has saturated the reference channel. • (3) During a fluorescence read, a well saturated the PMT. **Probable Causes:** Scenario 1 (Monochromator did not find home): • Flash bulb skipped a flash due to a defective lamp connection or power supply. • Order-sorting filter wheel is jammed, not aligning the through hole with the light path. • Monochromator is defective. • Absorbance analog PCB has intermittently failed. Scenario 2 (Reference channel): • The monochromator mirror/grating is damaged. • Absorbance analog PCB has intermittently failed. • Missed flashes or an erratic flash lamp. • Order-sorting filter wheel is jammed, not aligning the correct bandpass filter with the light path, or the through hole is allowing white light to pass. • Voltage to the lamp has increased due to failure of the lamp power supply, or the motor power supply PCB sent the wrong voltage request to the lamp power supply. Scenario 3 (fluorescence read): • Chemistry is too strong. • Sensitivity is too high.
0506	**Light beam saturated (too much light)** **Air measurement channel reading reached 65535.** This error indicates that filter 6 in absorbance mode has saturated the reference channel. **Probable Causes:** • The monochromator mirror/grating is damaged. • Absorbance analog PCB has intermittently failed. • Missed flashes or an erratic flash lamp. • Order-sorting filter wheel is jammed, not aligning the correct bandpass filter with the light path, or the through hole is allowing white light to pass. • Voltage to the lamp has increased due to failure of the lamp power supply, or the motor power supply PCB sent the wrong voltage request to the lamp power supply.

Code	Description and Probable Causes:
0508	**Light beam saturated (too much light)** **Air measurement channel reading reached 65535.** This error indicates that during background tests or prior to a read, the PMT reached saturation. When at rest, the PMT is charged to 650 volts to maintain stability for the next read. The Synergy is constantly testing the PMT when idle. If light reaches the PMT, this error can occur. **Probable Causes:** • Light leakage or bright light in the read chamber. • The EX filter wheel cartridge was removed prior to a Time-Resolve read, and ambient or light from the lamp reached the PMT. • Fluorescence analog PCB has intermittently failed. • EM and EX filter wheel overlap. If a hole in the EM wheel is required, try positions 1 or 4. (Basecode v2.14 or higher has greatly reduced the possibility of filter wheel overlap.)
0510	**Reference channel light beam saturated (too much light)** **Air reading reached 65535.** This error can indicate one of the following scenarios: • (1) During an absorbance filter calibration or wavelength scan, the measurement channel was saturated when storing to memory. • (2) During a spectral scan read, the measurement channel was saturated for one of the wavelengths. **Probable Causes:** Scenario 1 (Filter calibration): • The monochromator mirror/grating is damaged. • Absorbance analog PCB has intermittently failed. • Missed flashes or an erratic flash lamp. • Order-sorting filter wheel is jammed, not aligning the correct bandpass filter with the light path, or the through hole is allowing white light to pass. • Voltage to the lamp has increased due to failure of the lamp power supply, or the motor power supply PCB sent the wrong voltage request to the lamp power supply. Scenario 2 (Spectral scan read): • The monochromator mirror/grating is damaged. • Absorbance analog PCB intermittently failed. • Missed flashes or an erratic flash lamp. • Order-sorting filter wheel is jammed, not aligning the correct bandpass filter with the light path, or the through hole is allowing white light to pass. • Voltage to the lamp has increased due to failure of the lamp power supply, or the motor power supply PCB sent the wrong voltage request to the lamp power supply.
0511-0516	**Measurement channel light beam saturated (too much light)** **Air reading reached 65535.** This error indicates that during a read or system test, one of the filters from 1 to 6 in absorbance mode has saturated the measurement channel. The last number is the lambda table position number. **Probable Causes:** • The monochromator mirror/grating has a defect. • Absorbance analog PCB intermittently failed. • Order-sorting filter wheel is jammed, not aligning the correct bandpass filter with the light path, or the through hole is allowing white light to pass. • Voltage to the lamp has increased due to failure of the lamp power supply, or the motor power supply PCB sent the wrong voltage request to the lamp power supply.

Code	Description and Probable Causes:
0600	**Filter gain out of range** **Fail if PMT saturation is not met within 3 ms.** This error indicates that during fluorescence autocalibration, the gain was increased to an unsafe level, and the PMT analog PCB did not reach saturation. **Probable Causes:** • The autocalibration jig is incorrectly placed in the carrier. The mirrors are not facing in the correct direction. • The EM autocalibration jig is not connected to the PMT analog PCB.
0601 - 0606	**Time-Resolved function reference channel gain out of range for the selected wavelength** **Fail if reference signal > 40000 and gain = 1.** This error indicates that the absorbance reference channel gain for a specific wavelength during Time-resolved readings is out of the range necessary to ensure the lambda performance to specifications. The second to last number is the lambda table position number. **Probable Causes:** • The absorbance reference channel PCB is defective. • Order-sorting filter wheel is jammed not aligning the correct bandpass filter with the light path, or the through hole is lined up, allowing white light to pass. • Monochromator is defective. • Flash lamp, alignment, or Flash lamp power supply is defective. • Lamp is too bright.
0610 - 0660	**Time-Resolved function reference channel gain out of range for the selected wavelength** **Fail if Reference signal > 40000 and Gain = 1.** **Note:** The order of the last two digits is <Filter> <Channel>. This is not consistent with other error codes. This error indicates that the absorbance reference channel gain for a specific wavelength during Time-Resolved readings is out of the range necessary to ensure the lambda performance to specifications. The second to last number is the lambda table position number. **Probable Causes:** • The absorbance reference channel PCB is defective. • Order-sorting filter wheel is jammed, not aligning the correct bandpass filter with the light path, or the through hole is allowing white light to pass. • Monochromator is defective. • Flash lamp, alignment, or Flash lamp power supply is defective. • Lamp is too bright.
0611 - 0616	**Measurement channel gain out of range for the selected wavelength** **Fail if Air reading > 60000 with a Gain = 1.** This error indicates that during a filter calibration or testing the reader prior to a read, one of the filters saturated the measurement channel. The last number is the lambda table position number. **Probable Causes:** • The monochromator mirror/grating is damaged. • Order-sorting filter wheel is jammed, not aligning the correct bandpass filter with the light path; the filter is degraded and not passing enough light energy, or filter is blocking the light. • Absorbance analog PCB has intermittently failed. • Missed flashes or an erratic flash lamp. • Voltage to the lamp has decreased due to failure of the lamp power supply, or the motor power supply PCB sent the wrong voltage request to the lamp power supply.

Absorbance Reader Noise Errors (0700-0A16)

Typical noise data during the system self check is under 5 counts in both measurement and reference channels. Failure of this test indicates basic instability. The instrument should be returned for service to correct the problem.

Code	Description and Probable Causes:
0700	**PMT Bias current offset** **See "Bias current offset" on self-test. Fail if > 5 counts.** This error indicates that the PMT analog PCB noise level is elevated and is not able to compensate. This is not affected by the PMT or PMT base. The PMT gain is set to 0. **Probable Causes:** • PMT analog board failed to compensate for elevated noise. • Motor power supply PCB and PMT analog PCB not properly grounded (defective connection) • Motor power supply PCB is noisy, causing the PMT analog PCB to be noisy. **Absorbance reference channel noise test at max gain** **See noise "Delta" on self-test fail if < 20.** This error indicates significant variations in background electronic noise were detected when blocking the light and increasing the gain to maximum. **Probable Causes:** • Electrical noise may be penetrating the measurement chamber. The bottom and top shrouds are part of the electrical shielding. Verify that the shrouds are installed and properly fastened. • The coaxial cable ground between the reference channel and the absorbance analog PCB may be floating or disconnected. • There may be an ambient light leak. Ensure the plate carrier door and the front hinged door are properly closed. • Analog PCB failure; the photodetector is noisy. • A faulty analog PCB or faulty internal grounding may cause internal electronic noise.
0710	**Absorbance measurement channel noise test at max gain** **See noise "Delta" on self-test fail if < 20.** This error indicates significant variations in background electronic noise were detected when blocking the light and increasing the gain to maximum. **Probable Causes:** • Electrical noise may be penetrating the measurement chamber. The bottom and top shrouds are part of the electrical shielding. Verify that the shrouds are installed and properly fastened. • The coaxial cable ground between the reference channel and the absorbance analog PCB may be floating or not connected. • There may be an ambient light leak. Ensure the plate carrier door and the front hinged door are properly closed. • Analog PCB failure; the photodetector is noisy. • Faulty analog PCB or faulty internal grounding may cause internal electronic noise.

Code	Description and Probable Causes:
0800	**PMT failed Noise Offset where the initial offset value was not between 700 and 2450 (see the "offset voltage" on the system test)** This error indicates that during the system test, the background electronic signal that was detected is outside of acceptable limits at 0 gain when blocking the light. **Probable Causes:** If the value is larger than 2450: • Too much light has saturated the PMT. Turn the unit off and wait 24 hours. • A faulty PMT analog PCB or faulty internal grounding may cause internal electronic noise, or the motor power supply PCB is defective, or both. • PMT or PMT base is defective. • There may be an ambient light leak. Ensure the plate carrier door and the front hinged door are properly closed. • Electrical noise may be penetrating the measurement chamber. The bottom and top shrouds are part of the electrical shielding. Verify that the shrouds are installed and properly fastened. If the value is less than 700: • PMT base cable lost ground connection. Rebuild connector. • PMT or PMT base defective or too quiet. • PMT analog PCB and/or Motor power supply PCB are defective. **Absorbance reference channel failed offset range** **See "noise Max" < 20000 and "noise Min" > 10 on the system test.** This error indicates that during the system test, the background electronic signal that was detected is outside of acceptable limits at maximum gain when blocking the light. **Probable Causes:** If noise Max is > 20000: • The photodetector is too noisy and is defective. • Absorbance channel analog PCB is defective. • A faulty analog PCB or faulty internal grounding may cause internal electronic noise. • There may be an ambient light leak. Ensure the plate carrier door and the front hinged door are properly closed. • Electrical noise may be penetrating the measurement chamber. The bottom and top shrouds are part of the electrical shielding. Verify that the shrouds are installed and properly fastened. If noise Min is < 10: • The photodetector is not connected or is defective, giving a noise reading of zero. • Absorbance channel analog PCB is defective.
0810	**Absorbance measurement channel failed offset range** **See "noise Max" < 20000 and "noise Min" > 10 on the system test.** This error indicates that during the system test, the background electronic signal that was detected is outside of acceptable limits at maximum gain when blocking the light. **Probable Causes:** If noise Max is > 20000: • The photodetector is too noisy and is defective. • Absorbance channel analog PCB is defective. • A faulty analog PCB or faulty internal grounding may cause internal electronic noise. • There may be an ambient light leak. Make sure the plate carrier door and the front hinged door are properly closed. • Electrical noise may be penetrating the measurement chamber. The bottom and top

Code	Description and Probable Causes:
	shrouds are part of the electrical shielding. Check to see if the shrouds are installed and are properly fastened. If noise Min is < 10: • The photodetector is not connected, or the optic spray is damaged or defective, giving a noise reading of zero. • Absorbance channel analog PCB is defective.
0900	**The absorbance reference channel Dark current value failed** **See "Dark" on the system test. See criteria in text below.** This error can indicate one of the following scenarios: • The reference channel failed during a read or spectral scan for one of the following reasons: - Dark value was < 100 during a spectral scan using 8 flashes and 8 resets during sweep mode. - Dark value was < 100 during a spectral scan using 8 flashes and the number of resets saved for that wavelength during normal or rapid mode. • The reference channel failed < 100 or > 20000 during filter calibration or spectral scan with the flash on. • The reference channel failed < 100 during filter calibration or spectral scan with the flash off. **Probable Causes:** If failed < 100: • Absorbance analog PCB or reference channel analog PCB is defective. • Shielding of the cable between reference channel and analog PCB is defective or disconnected. • Reference channel photodetector is defective. If failed > 20000: • Reference channel photodetector is defective. • A faulty analog PCB or faulty internal grounding may cause internal electronic noise. • There may be an ambient light leak. Ensure the plate carrier door and the front hinged door are properly closed. • Electrical noise may be penetrating the measurement chamber. The bottom and top shrouds are part of the electrical shielding. Verify that the shrouds are installed and properly fastened. • Order-sorting filter wheel is jammed, not aligning the filter wheel to block the light path, or the filter is degraded and is not passing enough light energy.
0901 – 0906	**The absorbance reference channel Dark current value failed** **See "Dark" on the system test. See criteria in text below.** The last number is the lambda table position number. This error can indicate one of the following scenarios: • The reference channel failed < 100 during the optic test with the flash on. • The reference channel failed < 100 during a read or blank read not in sweep mode with the flash off. • The reference channel failed < 100 or the Dark value has changed more than 10% from the last self-test data during a read or blank read with the flash on. **Probable Causes:** • Absorbance analog PCB or reference channel analog PCB is defective. • Cable between reference channel and analog PCB is defective or disconnected. • Reference channel photodetector is defective or the optic spray is damaged. • A faulty analog PCB or faulty internal grounding may cause internal electronic noise. • There may be an ambient light leak. Make sure the plate carrier door and the front hinged

Code	Description and Probable Causes:
	door are properly closed. • Electrical noise may be penetrating the measurement chamber. The bottom and top shrouds are part of the electrical shielding. Verify that the shrouds are installed and are properly fastened. • Order-sorting filter wheel is jammed and not aligning the filter wheel to block the light path, or the filter is degraded and not passing enough light energy.
0910	**The absorbance measurement channel Dark current value failed** **See "Dark" on the system test. See criteria in text below.** This error can indicate one of the following scenarios: • The measurement channel failed during a read or spectral scan for one of the following reasons: - Dark value was < 100 during a spectral scan using 8 flashes and 8 resets during sweep mode. - Dark value was < 100 during a spectral scan using 8 flashes and the number of resets saves for that wavelength during normal and rapid mode. • The measurement channel failed < 100 or > 20000 during filter calibration or spectral scan with the flash on. • The measurement channel failed < 100 during filter calibration or spectral scan with the flash off. **Probable Causes:** <u>If failed < 100:</u> • Absorbance analog PCB or measurement channel analog PCB is defective. • Shielding of the cable between the measurement channel and analog PCB is defective or disconnected. • Measurement channel photodetector is defective. <u>If failed > 20000:</u> • Measurement channel photodetector is defective. • A faulty analog PCB or faulty internal grounding may cause internal electronic noise. • There may be an ambient light leak. Make sure the plate carrier door and the front hinged door are properly closed. • Electrical noise may be penetrating the measurement chamber. The bottom and top shrouds are part of the electrical shielding. Verify that the shrouds are installed and are properly fastened. • Order-sorting filter wheel is jammed, not aligning the filter wheel to block the light path, or the filter is degraded and is not passing enough light energy.
0911 - 0916	**The absorbance measurement channel Dark current value failed** **See "Dark" on the system test. See criteria in text below.** The last number is the lambda table position number. This error can indicate one of the following scenarios: • The measurement channel failed < 100 during optic test with the flash on. • The measurement channel failed < 100 during a read or blank read not in sweep mode with the flash off. • The measurement channel failed < 100 or the Dark value has changed more than 10% from the last self-test data during a read or blank read with the flash on. **Probable Causes:** • Absorbance analog PCB or measurement channel analog PCB is defective. • Shielding of the cable between measurement channel and analog PCB is defective or disconnected. • Measurement channel photodetector is defective or the optic spray is damaged.

Code	Description and Probable Causes:
	• A faulty analog PCB or faulty internal grounding may cause internal electronic noise. • There may be an ambient light leak. Make sure the plate carrier door and the front hinged door are properly closed. • Electrical noise may be penetrating the measurement chamber. The bottom and top shrouds are part of the electrical shielding. Check to see if the shrouds are installed and are properly fastened. • Order-sorting filter wheel is jammed, not aligning the filter wheel to block the light path or the filter is degraded and is not passing enough light energy.
0A01 – 0A06	**Reference Channel Air/Blank out of range** **See criteria in text below.** This error indicates the Air reading at the time of the plate read was < 50% of the Air reading at the time of the optic test. The last number is the lambda table position number. **Probable Causes:** • Flash lamp has missed flashes or there is an erratic flash during the blank read. • Dirty optics or spilled substance on the optics. • Order-sorting filter wheel is jammed, not aligning the correct bandpass filter with the light path, or the filter is degraded and is not passing enough light energy or is blocking the light.
0A11 – 0A16	**Measurement Channel Air/Blank out of range** **See criteria in text below.** This error indicates the Air reading at the time of the plate read was < 50% of the Air reading at the time of the optic test. The last number is the lambda table position number. **Probable Causes:** • Flash lamp has missed flashes or there is an erratic flash during the blank read. • Dirty optics or spilled substance on the optics. • Order-sorting filter wheel is jammed, not aligning the correct bandpass filter with the light path, or the filter is degraded and is not passing enough light energy or is blocking the light.

Internal Self-Test Errors (0D00-2918)

Code	Description and Probable Causes:
0D00	**Wavelength calibration data missing during a spectral scan** **See criteria in text below.** This error indicates that wavelength data is missing prior to a spectral scan, meaning the wavelength has not been calibrated. This includes the Gain test data. (Look for the resets to be < 1 or > 8 to fail.) **Probable Causes:** • Memory is corrupt. • The wavelength was not calibrated prior to the read. • The gain test skipped or failed for this wavelength.
0D01 – 0D06	**Wavelength calibration data missing during an absorbance read** **See criteria in text below.** This error indicates that wavelength data is missing prior to an absorbance read, meaning the wavelength has not been calibrated. This includes self-test and Gain test. (Look for the resets to be < 1 or > 8 to fail.) The last number is the lambda table position number. **Probable Causes:** • The wavelength was not calibrated prior to the read. • The gain test skipped or failed for this wavelength.

Code	Description and Probable Causes:
0E01 – 0E06	**Wavelength not found in table** **Absorbance, Fluorescence / Luminescence.** This error indicates that the specified wavelength is not detected in the instrument's filter table. The last number is the filter set number in the assay protocol. **Probable Causes:** • Wavelength or bandpass was not entered correctly or was missing in filter table. • Wavelength or bandpass was entered correctly in the PC software but was never sent to reader. • Verify the lambda table and the fluorescence filter table have the wavelengths loaded into the instrument from the controlling PC software. Compare the contents of the lambda table and Excitation and Emission filter wheels with the software's filter table.
0F00	**Reference channel correction outside limits** **See criteria in text below.** This error can indicate one of the following scenarios: • During a spectral scan, the flash-on value minus flash-off is < 500 normal mode, or < 500 * calibrated resets / 8 for sweep mode. • During a spectral scan, the blanking on air uses minimal flashes to test the light performance. A ratio is used to determine the performance of the lamp. The ratio used is: Reference channel blank for wavelength / (flash-on reference data – corrected reference dark offset). The ratio will fail if < 0.5 or > 2.0. **Probable Causes:** • Lamp, alignment, or lamp power supply failure. • Defective reference channel analog PCB, or absorbance channel analog PCB, or the cable in-between. • Order-sorting filter wheel is jammed, not aligning the correct bandpass filter with the light path and white light is passing through, or the filter is degraded and is not passing enough light energy or is blocking the light. • Damaged optic spray.
0F01 – 0F06	**Reference channel correction outside limits** **See criteria in text below. See Delta (Air – Dark) on self-test.** This error can indicate one of the following scenarios: • During the system test, the Delta was < 500 for one of the wavelengths. • During sweep mode, only the blanking on air uses one flash to test the light performance. A ratio is used to determine the performance of the lamp. The ratio used is: Reference channel blank for wavelength / (flash-on reference data – corrected reference dark offset). The ratio will fail if < 0.5 or > 2.0. • During a spectral scan or blank read, the flash-on value minus flash-off is < 500 normal mode, or < 500 * calibrated resets / 8 for sweep mode. **Probable Causes:** • Lamp, alignment, or lamp power supply failure. • Reference channel beam splitter lens cracked. • Defective reference channel analog PCB, absorbance channel analog PCB, or the cable in-between. • Order-sorting filter wheel is jammed, not aligning the correct bandpass filter with the light path and white light is passing through, or the filter is degraded and is not passing enough light energy or is blocking the light. • Damaged optic spray.

Code	Description and Probable Causes:
0F10	**Measurement channel correction outside limits** **See criteria in text below. Non Time-Resolved.** This error indicates that during a spectral scan, the flash-on value minus flash-off is < 8000 normal mode, < 8000 * calibrated resets / 8 for sweep mode. **Probable Causes:** • Lamp, alignment, or lamp power supply failure. • Defective reference channel analog PCB, absorbance channel analog PCB, or the cable in-between. • Order-sorting filter wheel is jammed, not aligning the correct bandpass filter with the light path and white light is passing through, or the filter is degraded and is not passing enough light energy or is blocking the light. • Damaged optic spray. • See the next code for more possibilities.
0F10 – 0F60	**Time-Resolved function Reference channel correction outside limits** **Fail if Reference signal < 500 and gain >= 248.** **Note:** The order of <Filter> <Channel> is not consistent with other error codes. This error indicates that during a Time-Resolve read, delta (air – dark) was < 500 and the gain could not be incremented past 248. **Probable Causes:** • Lamp, alignment, or lamp power supply failure. • Absorbance channel analog PCB. • Order-sorting filter wheel is jammed, not aligning the correct bandpass filter with the light path and white light is passing through, or the filter is degraded and is not passing enough light energy or is blocking the light. • Damaged optic spray.
0F11 – 0F16	**Measurement channel correction outside limits** **See criteria in text below. See Delta (Air – Dark) on self-test.** This error can indicate one of the following error scenarios: • During a system test, the Delta was < 8000 for one of the wavelengths. • During a spectral scan or blank read, the flash-on value minus flash-off was < 8000 normal mode, or < 8000 * calibrated resets / 8 for sweep mode. **Probable Causes:** • Lamp, alignment, or lamp power supply failure. • Absorbance channel analog PCB. • Order-sorting filter wheel is jammed, not aligning the correct bandpass filter with the light path and white light is passing through, or the filter is degraded and is not passing enough light energy or is blocking the light. • Damaged optic spray.
1000	**Necessary configuration data missing** (This error code indicates old basecode. Recommend upgrading.) **Probable Causes:** • The flash memory on the 7080400 PCB is defective or corrupt. The basecode software and/or assays may need to be re-downloaded.
1100	**Failed configuration checksum test** This error indicates that during self-test or at the end of a plate read, the checksums calculated for configuration flash memory page 0 do not match the saved checksums. **Probable Causes:** • The flash memory on the 7080400 PCB is defective or corrupt. The basecode software may need to be re-downloaded.

Code	Description and Probable Causes:
1101	**Failed configuration checksum test** This error indicates that during self-test or at the end of a plate read, the checksums calculated for configuration flash memory page 1 do not match the saved checksums. **Probable Causes:** • The flash memory on the 7080400 PCB is defective or corrupt. The basecode software may need to be re-downloaded.
1200	**Autocalibration data missing for the Fluorescence top/bottom and absorbance reads** This error indicates that no autocal data for any of the three read locations (bottom probe, top probe, absorbance). **Probable Causes:** • The 7080400 PCB was changed and the Flash memory does not have the calibration values loaded. Performing the autocalibration procedure will correct this.
130x	**<Motor> not homed successfully** This error indicates that the <motor> is not at home. At the beginning of the motor_position function, the basecode checks to see if the motor is homed. If it is not homed, an error is displayed on the controlling PC and the function is terminated. **Probable Causes:** • If an error 0200 is ignored, see the "Probable Causes" for **0200**.

Error	Motor	See Probable Causes for
1300	X-axis	0200
1301	Y-axis	0201
1302	EX motor	0202
1303	EM motor	0203
1304	Order-sorting filter wheel	0204
1305	Monochromator	0405
1306	Probe Height	0206
1307	Probe changer	0207
1308	Syringe 1	0208
1309	Syringe 2	0209

Code	Description and Probable Causes:
1501 – 150F	**Incubator zone failed temperature range** This error indicates that one or more of the incubator zones failed to maintain their temperature. The temperature could be too high or too low. After turning on the incubator, wait at least 10 minutes for it to stabilize. Zone encoding is as follows: zone 1 = 1, 2 = 2, 3 = 4, 4 = 8 (see table below for more information)

Error code	Zone
1501	Zone 1
1502	Zone 2
1503	Zone 1 and 2
1504	Zone 3
1505	Zone 1 and 3
1506	Zone 2 and 3
1507	Zone 1, 2, and 3
1508	Zone 4
1509	Zone 1 and 4
150A	Zone 2 and 4
150B	Zone 1, 2, and 4
150C	Zone 3 and 4
150D	Zone 1, 3, and 4
150E	Zone 2, 3, and 4
150F	Zone 1, 2, 3, and 4

Zone	Location
1	Top Right
2	Top Left
3	Bottom Right
4	Bottom Left

When facing the front of the unit.

Probable Causes:

- Thermistor is defective for that zone.
- Heating pad is defective.
- Motor power supply PCB is defective.
- Incubation chamber is less than 12ºC.

Code	Description and Probable Causes:
1511 – 151F	**Incubator Thermistor failed** This error indicates that one or more of the incubator zone thermistors are defective. After turning on the incubator, wait at least 10 minutes for it to stabilize. Zone encoding is as follows: zone 1 = 1, 2 = 2, 3 = 4, 4 = 8 (see table below for more information). **Probable Causes:** • Thermistor is defective for that zone. • Motor power supply PCB is defective.

Error code	Zone
1511	Zone 1
1512	Zone 2
1513	Zone 1 and 2
1514	Zone 3
1515	Zone 1 and 3
1516	Zone 2 and 3
1517	Zone 1, 2, and 3
1518	Zone 4
1519	Zone 1 and 4
151A	Zone 2 and 4
151B	Zone 1, 2, and 4
151C	Zone 3 and 4
151D	Zone 1, 3, and 4
151E	Zone 2, 3, and 4
151F	Zone 1, 2, 3, and 4

Zone	Location
1	Top Right
2	Top Left
3	Bottom Right
4	Bottom Left

When facing the front of the unit.

<table>
<tr><th>Code</th><th>Description and Probable Causes:</th></tr>
<tr><td>1521 – 152F</td><td>
Incubator A to D failed
This error indicates that one or more of incubator zones A to D are defective. After turning on the incubator, wait at least 10 minutes for it to stabilize.
Zone encoding is as follows:
zone 1 = 1, 2 = 2, 3= 4, 4 = 8 (see table below for more information).
<table>
<tr><th>Error code</th><th>Zone</th></tr>
<tr><td>1521</td><td>Zone 1</td></tr>
<tr><td>1522</td><td>Zone 2</td></tr>
<tr><td>1523</td><td>Zone 1 and 2</td></tr>
<tr><td>1524</td><td>Zone 3</td></tr>
<tr><td>1525</td><td>Zone 1 and 3</td></tr>
<tr><td>1526</td><td>Zone 2 and 3</td></tr>
<tr><td>1527</td><td>Zone 1, 2, and 3</td></tr>
<tr><td>1528</td><td>Zone 4</td></tr>
<tr><td>1529</td><td>Zone 1 and 4</td></tr>
<tr><td>152A</td><td>Zone 2 and 4</td></tr>
<tr><td>152B</td><td>Zone 1, 2, and 4</td></tr>
<tr><td>152C</td><td>Zone 3 and 4</td></tr>
<tr><td>152D</td><td>Zone 1, 3, and 4</td></tr>
<tr><td>152E</td><td>Zone 2, 3, and 4</td></tr>
<tr><td>152F</td><td>Zone 1, 2, 3, and 4</td></tr>
</table>
<table>
<tr><th>Zone</th><th>Location</th></tr>
<tr><td>1</td><td>Top Right</td></tr>
<tr><td>2</td><td>Top Left</td></tr>
<tr><td>3</td><td>Bottom Right</td></tr>
<tr><td>4</td><td>Bottom Left</td></tr>
</table>
When facing the front of the unit.
Probable Causes:
• A to D is defective for that zone.
• Motor power supply PCB is defective.
</td></tr>
<tr><td>1700</td><td>
Kinetic interval not correct for selected options
This error indicates one of the following scenarios:
• Kinetic interval in the current assay is too short.
• Kinetic interval for a fluorescence plate read is impossible for the given parameters.
• Kinetic interval for an absorbance read, the total time, or kinetic interval = 0.
• Kinetic interval for a fluorescence kinetic interval is too big (> 99999) to transmit.
Probable Causes:
• User programming error.
• Increase or decrease the kinetic interval.
</td></tr>
<tr><td>1800</td><td>
Too many kinetic intervals
(This error code indicates old basecode. Recommend upgrading.)
This error indicates that the combination of assay parameters results in more kinetic reads than supported by the software.
• Change the assay parameters to reduce the number of total kinetic reads. Note: The Synergy HT supports kinetics through computer control only.
</td></tr>
</table>

Code	Description and Probable Causes:
1900	**Memory allocation failed** This error indicates that the process failed while saving or moving data. If this occurs, try turning the instrument off, waiting for 30 seconds, and then turning the instrument back on. **Probable Causes:** • The memory is corrupt. Replace the processor PCB. • If the error persists, contact BioTek TAC.
1C00 1C01	**A/D calibration STBY line never went low** **A/D calibration STBY line went low but never transitioned to a high** This error indicates a failure with one of the PCBs when trying to initialize the A/D, or the cable to the defective PCB has lost continuity. This error can indicate one of the following A/D circuits: • Fluorescence analog PCB. • Absorbance analog PCB. **Probable Causes:** • Fluorescence analog PCB or connection between the analog PCB and motor power supply PCB. • Absorbance analog PCB or the cable between the analog PCB and motor power supply PCB.

1F01 – 1F02	**Band-pass overlap in filter set**
	This error indicates an open hole or overlapping filter set within the optical path of the excitation and emission filter wheels designated by the protocol.
	Equation used for overlapping:
	If EM wavelength is > EX
	if (EX wavelength + ½ bandpass) >= (EM wavelength – ½ bandpass) then fail
	else if EX wavelength is > EM
	if (EM wavelength + ½ bandpass) >= (EX wavelength – ½ bandpass) then fail
	Note: Only 2 filter sets can be sent when developing software (not Gen5 or KC4). 1F01 is for the first set; 1F02 is for the second set.

2100	**Invalid parameter value selected** This error can occur only during computer control, indicating that an invalid assay configuration was sent to the instrument.
2200	**PMT signal too low** This error indicates that during the 750V test, the PMT signal was less than 1. If this is true, then increase the gain to 1250V and test for PMT signal > 1. If PMT signal is still < 1, the PMT is not connected or is defective. **Probable Causes:** • The PMT is not connected • The PMT analog PCB, PMT base, or the PMT is defective
2201	**PMT test signal too high at the 750-volt bias** **See 750V measurement on self-test. Measured value > 3000 to fail.** This error indicates that the PMT dark current is higher than the specified limit. **Probable Causes:** • The PMT has been saturated due to ambient light leakage. • The PMT has been damaged. • The PMT base is defective, or the coaxial cable from the base has lost the ground connection for the shield.

Code	Description and Probable Causes:
2203	**PMT test ratio test failed** (This error code indicates old basecode. Recommend upgrading.) The 750/500 volt ratio is less than 2. This error indicates that the PMT dark current is higher than specified limit. **Probable Causes:** • The PMT has been saturated either due to ambient light leakage. • The PMT has been damaged. • PMT base is defective or the coaxial cable from the base has lost the ground connection for the shield.
2300	**Lamp control failure** (This error code indicates old basecode. Recommend upgrading.) This error indicates a failure related to the lamp. The lamp assembly is accessed by opening the hinged door on the front of the instrument. The lamp may be out. Check to see if the lamp is on when the instrument is on. The lamp assembly may need to be replaced. See page 13 for more information. If the lamp is on, be sure to note the test type.
2400	**X-axis position incorrect during XY (Back) sensor test** This error indicates that the X-axis did not find the XY sensor, or found the XY sensor outside its limits. Perform a self-test to verify the error. See Back Sensor on the self-test results; the Delta should be < 32 to pass. If it is > 16, this is an indicator that the carrier needs to be serviced soon. **Probable Causes:** • X-axis rail is dirty. The nylon slider bushings are worn and causing too much friction, or dirt in the roller bearings is causing the bearings to jam. • Y-axis rail is dirty. The bearings are dirty and worn, causing too much friction. • Defective or broken optical sensor. • Defective Motor Controller PCB. • Bent opto flag on carrier. • Carrier feet have been adjusted to the point where the XY flag can no longer enter the XY sensor. • The shipping screw was not installed before moving the unit, and the XY sensor was damaged. • Fault motor gear attachment (set screw loose).
2401	**Y-axis position incorrect during middle sensor test** This error indicates that the Y-axis did not find the middle sensor, or found the middle sensor outside its limits. If the carrier is not extended, the unit compares the position against the XY sensor; otherwise, the unit assumes the carrier is at the middle sensor and will verify or home the sensor. Perform a self-test to the verify error. See "Middle Sensor" on the self-test results; the Delta should be < 32 to pass. If it is > 16, this is an indicator that the carrier needs to be serviced soon. **Probable Causes:** • Y-axis rail is dirty. The bearings are dirty and worn, causing too much friction. • Defective or broken optical sensor. • Defective Motor Controller PCB. • Shipping screw was not installed before moving the unit, and the XY sensor was damaged. • Something moved the carrier while it was extended. • Faulty motor gear attachment (set screw loose).

Code	Description and Probable Causes:
2500	**X-axis went by flash location too soon during sweep mode** This error indicates that during sweep mode, the unit calculated the exact time for the flash to occur and the flash failed to flash at that time. **Probable Causes:** • Defective motor driver PCB. • One of the carrier axis motors is defective.
2505	**Monochromator position more than 1 full step past flash point** This error indicates that during a spectral scan, the monochromator went more than 1 step past the flash point. **Probable Causes:** • Monochromator motor is defective. • Motor power supply PCB lost or added counts from monochromator motor.
2600	**Physical limit exceeded for area scan request** This error can occur only during computer control, indicating that the area scan requested is too large for the unit. The X-axis tripped the XY sensor. The Corning® Costar 12 well plate (part number 430345) has a width dimension that is causing a 2600 error with Synergy. Simply changing the width to 84320 will alleviate the error message and will not affect the results. In KC4 v3.4 r16, the width was changed to 84320 and the 2600 error does not appear when running a protocol that specifies the Corning Costar 12 Well plate type.
280x	**<Motor> currently in use** This error indicates that the <motor> is not available for this model or already has a task assigned to it. At the beginning of the motor_setup function, the basecode checks to see if the motor is currently in use or is not available. This error can occur with any motor request. See table below for errors. **Error** / **Motor** 2800 / X-axis 2801 / Y-axis 2802 / EX motor 2803 / EM motor 2804 / Order-sorting filter wheel 2805 / Monochromator 2806 / Probe Height 2807 / Probe changer 2808 / Syringe 1 2809 / Syringe 2 **Probable Causes:** • User selected the wrong model in the controlling software. • The incorrect basecode was downloaded to the instrument.
2900	**Fluorescence Lamp off voltage out of range (0 – 730)** This error indicates that during a self-test, the lamp did not indicate that it was off. **Probable Causes:** • The sense resistor is damaged on the 7090402 PCB. • Cable between the lamp PCB and motor power supply PCB is defective. • Motor power supply PCB is defective.

Code	Description and Probable Causes:
2901	**Lamp reference voltage out of range (1459 – 1917)** **See self-test Voltage Reference "Lamp".** This tests the voltage across a sense resistor in series of the lamp. It is monitoring the current through the lamp. This test is performed when the instrument is first turned on and then tested periodically during background functions. **Probable Causes:** • The lamp is weak or defective—change the lamp (BioTek PN 7080500). • The sense resistor is damaged on the 7090402 PCB. • The regulator mounted on the 7090402 PCB is defective. • Verify the lamp is actually on or off. Perform a self-test. This error can give false errors. If the lamp is on, disregard this error. • Reference Field Change Notice L0045.
2902	**24V reference voltage out of range (1769 – 2162)** **See self-test Voltage Reference "24V"** This tests the voltage across a sense resistor in a series of the 24 volts; it is monitoring the current. This test is performed during self-test. **Probable Causes:** • The motor power supply PCB is defective. • The sense resistor is damaged on the motor power supply PCB.
2903	**40-Volt Motor reference voltage out of range (2027 – 2069)** **See self-test Voltage Reference "Mtr"** This tests the voltage across a sense resistor in series of the 40 volts; it is monitoring the current. This test is performed during self-test. **Probable Causes:** • The motor power supply PCB is defective. • The sense resistor is damaged on the motor power supply PCB.
2904	**3.5V Flash Power Supply reference voltage is out of range (1399 – 1453)** **See self-test Voltage Reference "Min"** This tests the voltage across a sense resistor in series of the 3.5 volts; it is monitoring the current. This test is performed during self-test. **Probable Causes:** • The motor power supply PCB is defective. • The sense resistor is damaged on the motor power supply PCB.
2905	**4.25V Flash Power Supply reference voltage is out of range (1699 – 1772)** **See self-test Voltage Reference "Low"** This tests the voltage across a sense resistor in series of the 4.25 volts; it is monitoring the current. This test is performed during self-test. **Probable Causes:** • The motor power supply PCB is defective. • The sense resistor is damaged on the motor power supply PCB.
2906	**5.25V Flash Power Supply reference voltage is out of range (2110 – 2211)** **See self-test Voltage Reference "High"** This tests the voltage across a sense resistor in series of the 5.25 volts; it is monitoring the current. This test is performed during self-test. **Probable Causes:** • The motor power supply PCB is defective. • The sense resistor is damaged on the motor power supply PCB.

<table>
<tr><th>Code</th><th>Description and Probable Causes:</th></tr>
<tr><td>2907</td><td>6.00V Flash Power Supply reference voltage is out of range (2411 - 2532)
See self-test Voltage Reference “Max”
This tests the voltage across a sense resistor in series of the 6.00 volts; it is monitoring the current. This test is performed during self-test.
Probable Causes:
• The motor power supply PCB is defective.
• The sense resistor is damaged on the motor power supply PCB.</td></tr>
<tr><td>2908</td><td>8.00V Flash Power Supply reference voltage is out of range (3251 – 3417)
(TR only) See self-test Voltage Reference “HTTR”
This tests the voltage across a sense resistor in series of the 8.00 volts; it is monitoring the current. This test is performed during self-test.
Probable Causes:
• The motor power supply PCB is defective.
• The sense resistor is damaged on the motor power supply PCB.</td></tr>
<tr><td>2911 – 2918</td><td>VRef instability
This error indicates that one of the channels (voltage reference) feeding the A/D converter is unstable, i.e., A/D max – A/D min > 8 after 8 attempts. See the table below for more information for each channel.
Note: If multiple channels are intermittently failing a 291x (x = channels) error, it is possible that the A/D converter is unstable.
<table>
<tr><th>Error Displayed</th><th>See Error for More Information</th></tr>
<tr><td>2911</td><td>2901</td></tr>
<tr><td>2912</td><td>2902</td></tr>
<tr><td>2913</td><td>2903</td></tr>
<tr><td>2914</td><td>2904</td></tr>
<tr><td>2915</td><td>2905</td></tr>
<tr><td>2916</td><td>2906</td></tr>
<tr><td>2917</td><td>2907</td></tr>
<tr><td>2918</td><td>2908</td></tr>
</table>
Probable Causes:
• The motor power supply PCB is defective.
• The sense resistor is damaged on the motor power supply PCB.</td></tr>
</table>

Other Errors (2A00-4000)

Code	Description and Probable Causes:
2A00	**XY axis movement did not find the middle sensor** (This error indicates old basecode. Recommend upgrading.) This is indicating the middle sensor signal did not transition.
2A01	**Home carrier to middle sensor** This error indicates that the signal did not transition when homing the carrier to the middle sensor. Error 0201 will occur during initialization where 2A01 occurs any other time. **Possible causes** • Defective belt, pulley, dirty rail, bushings, bearings, or motor. • The carrier hit the top probe. • The carrier was moved while the plate was being placed on the carrier, causing the carrier to move off the middle sensor.
2B01	**Syringe motor axis did not find the home opto sensor transition** This error can indicate one of the following scenarios: • A motor was not able to move to its "home" position as registered by feedback from an optical sensor. • Prior to aspirating, the syringe was not within the homing sensor. To minimize the air bubble, the syringe must be in the opto sensor. **Note:** This error can apply to either Syringe 1 or Syringe 2. **Probable Causes:** • Linear way is dirty or needs lubrication. • Defective or broken optical sensor. • Syringe was not installed correctly or was not cleaned, causing stress on syringe movement by not allowing the syringe to move to the home position. • The glue between the lead screw and the motor has separated. • Connection between the Dispenser and Synergy is too long or has intermittently been lost. • The syringe valve did not open. • While moving in the negative direction, the syringe opto sensor triggered off, then on, indicating that the syringe went past the opto sensor.
2B02	**Syringe on sensor when it should be off** This error indicates that the current position > 1050 1/16th steps and the syringe is on the opto sensor when it should be off. **Note:** This error can apply to either Syringe 1 or Syringe 2. **Probable Causes:** • Linear way is dirty or needs lubrication. • Defective or broken optical sensor. • Syringe was not installed correctly or was not cleaned, causing stress on syringe movement by not allowing the syringe to move to the home position. • The syringe valve did not open. • The glue between the lead screw and the motor has separated.

Code	Description and Probable Causes:
2B03	**Opto sensor clear count obtained** This error indicates that during syringe initialization, the syringe motor tried to move off the opto sensor and moved > 1050 1/16th steps and did not see the opto transition. **Note:** This error can apply to either Syringe 1 or Syringe 2. **Probable Causes:** • Syringe was not installed correctly or was not cleaned, causing stress on syringe movement by not allowing the syringe to move off the home position. • Linear way is dirty or needs lubrication. • Defective or broken optical sensor. • The syringe valve did not open. • The glue between the lead screw and the motor has separated.
2B04	**Previous syringe move produced an FMEA sensor clear error** This error indicates that the previous move caused the syringe to lose steps. **Note:** This error can apply to either Syringe 1 or Syringe 2. **Probable Causes:** • Linear way is dirty or needs lubrication. • Defective or broken optical sensor. • The syringe valve did not open. • Syringe was not installed correctly or was not cleaned, causing stress on syringe movement by not allowing the syringe to move freely. • The glue between the lead screw and the motor has separated.
2B05	**Number of microsteps requested for move too large** This error indicates that during a dispense or move home function, the number of steps to move was > the maximum syringe travel (944 full steps). **Note:** This error can apply to either Syringe 1 or Syringe 2. **Probable Causes:** • Program or user error.
2B0A	**Trough plate not in carrier for prime or purge** This error indicates that prior to a prime or purge, the priming plate was not in the carrier. **Note:** This error can apply to either Syringe 1 or Syringe 2. **Probable Causes:** • The plate or trough being used is not opaque enough. • There is no priming plate or trough in carrier.
2C01	**Syringe calibration data not set** This error indicates that configuration data for either syringe has not been entered, or the data is corrupted. This corresponds to the 6 calibration values. **Note:** This error can apply to either Syringe 1 or Syringe 2. **Probable Causes:** • No configuration data entered. • Values entered are corrupted or incorrect.
2C02	**Syringe calibration checksum failed** This error indicates that the calibration data has been entered but the checksum failed. This corresponds to the 6 calibration values. **Note:** This error can apply to either Syringe 1 or Syringe 2. **Probable Causes:** • Values entered are corrupted or incorrect.

Code	Description and Probable Causes:
2C03	**During the validation of the syringe calibration data the µL/step failed** This error indicates that when the software calculated the µl/step, the results were either < 0.0100 or > 9.9999. **Note:** This error can apply to either Syringe 1 or Syringe 2. **Probable Causes:** • Values entered are corrupted or incorrect.
2C05	**During the validation of the syringe calibration data, the calibration data failed** This error can indicate one of the following error scenarios: • The minimum calibration value is not equal to 5. • The minimum measured value is not between 2 and 6. • The second measured value is not within ± 20% of the calibrated value. • The third through fifth measured values are not within ± 10% of the calibrated value. • The calibration values are not in ascending order. • The measured calibration values are not in ascending order. **Note:** This error can apply to either Syringe 1 or Syringe 2. **Probable Causes:** • Values entered are corrupted or incorrect. • Incorrect calibration of the syringe.
2C07	**Default calibration data set to "do not use"** This error indicates that the default calibration data flag is set. Syringe needs to be calibrated. **Note:** This error can apply to either Syringe 1 or Syringe 2. **Probable Causes:** • Factory default data is set; the syringe needs to be calibrated before use, or calibration values need to be entered from the syringe drive. • Values entered are corrupted or incorrect.
2D00	**During a dispense read the reader missed the start of the well read.** This error indicates that during a dispense read, the reader was not able to start the read for a particular well. **Probable Causes:** • The processor was busy running other tasks. • A previous task took longer than estimated.

2D02	**Filter bandpass overlap in intermediate switching position for multi-filter set reads**
	This error indicates that the software cannot move either the EX or EM filter wheel without causing the filters to overlap and saturate the PMT.
	Note: Only 2 filter sets can be sent when developing software.
	<u>Equation used for overlapping:</u>
	If EM wavelength is > EX
	if (EX wavelength + ½ bandpass) >= (EM wavelength – ½ bandpass) then fail
	Else if EX wavelength is >EM
	if (EM wavelength + ½ bandpass) >= (EX wavelength – ½ bandpass) then fail
	Probable Causes:
	• The filters placed in the filter wheels are not in the optimum order to prevent this error.
	• The filters defined in the filter table do not match the filter wheels.
	• The user did not send the filter table information to the reader after making changes to the table in the controlling software.

Code	Description and Probable Causes:
2D03	**EX or EM filters not adjacent for multi-filter set reads** This error indicates either the EX or the EM filter wheel is not set up correctly to have adjacent filters for a multi-filter set read. **Note:** Only 2 filter sets can be sent when developing software. **Probable Causes:** • The filters placed in the filter wheels are not in the optimum order to prevent this error. • The filters defined in the filter table do not match the filter wheels. • The user did not send the filter table information to the reader after making changes to the table in the controlling software.
2D04	**Filter plug(s) not positioned next to EX filter(s) for light shutter feature during a Dispense / well read** This error indicates that the EX filter wheel is not set up correctly for the light shutter feature. **Probable Causes:** • The filters placed in the filter wheels are not in the optimum order to prevent this error. • The filters defined in the filter table do not match the filter wheels. • The user did not send the filter table information to the reader after making changes to the table in the controlling software.
2D0D	**Well spacing not valid for dispensing** Well spacing in any direction is < 0.320" or < 8.13 mm. **Probable Causes:** • A 384-well plate was selected for a Dispense protocol.
2D0E	**During a dispense read, the reader missed the start of the plate read.** This error indicates that during a dispense read, the reader was not able to start the read. **Probable Causes:** • The processor was busy running other tasks. • A previous task took longer than estimated.
2D16	**Missed start of read event** This error indicates that the up-counting plate mode timer is already past event start time, or the well mode timer is already past start time for the current read event. **Probable Causes:** • Basecode 2.10 or lower used two timers to perform this function. Bascode 2.12 or higher uses one timer.
2D28	**Dispenser module not attached** Dispenser is not attached or has lost initialization due to an intermittent connection. **Probable Causes:** • Dispenser cable lost connection.
2E01	**Top Probe Height (Z Axis) did not calibrate during the Absorbance Cal** (This error indicates old basecode Recommend upgrading.) This error indicates that the probe Z position <= 24 full steps, indicating there is not enough margin available to calibrate the probe Z position. The distance between the top of the autocalibration jig and the homing opto sensor is <= 24 full steps. **Probable Causes:** • Linear way is dirty or needs lubrication. • Homing opto sensor is defective.

Code	Description and Probable Causes:
2E02	**Probe Z calibration failure** This error indicates that the probe Z position is <= 24 full steps, indicating there is not enough margin available to calibrate the probe Z position. The distance between the top of the autocalibration jig and the homing opto sensor is <= 24 full steps. **Probable Causes:** • Linear way is dirty or needs lubrication. • Homing opto sensor is defective.
2E03	**Incubator** (This error indicates old basecode. Recommend upgrading.)
3000 3001	**Time Resolve filter block is not installed when a TR function is requested** **Time Resolve filter block in the Excitation filter slot when a non TR fluorescence dispense read is selected** **Probable Causes:** • The Time-Resolved cartridge is not installed in the EX position. • The Hall Effect sensor is defective. • Instrument does not have the TR functionality and the DIP switch setting #4 on the 7080400 PCB is open and the DIP switch setting #1 is open on the 7090410 PCB.
3100	**Plate read took longer than kinetic interval** **Probable Causes:** • User-defined interval is incorrect.
3201	**No absorbance A/D ready transition**
3202	**No fluorescence A/D ready transition**
3203	**No incubation A/D ready transition**
3204	**No voltage reference channel A/D ready transition**
3306	**Required carrier outside when locked in** If the carrier is inside the read chamber and the probe needs to move down but the door is locked, the carrier cannot move out of the way of the top probe assembly.

Code	Description and Probable Causes:
4000	**PMT Overload at well location** This error indicates that at the well specified by the last 3 digits of the error code, the PMT was saturated. **Probable Causes:** • Chemistry is too bright for the sensitivity selected. Well location / error code for a 96 well plate:

	1	2	3	4	5	6	7	8	9	10	11	12
A	4001	4002	4003	4004	4005	4006	4007	4008	4009	400A	400B	400C
B	400D	400E	400F	4010	4011	4012	4013	4014	4015	4016	4017	4018
C	4019	401A	401B	401C	401D	401E	401F	4020	40021	40022	4023	4024
D	4025	4026	4027	4028	4029	402A	402B	402C	402D	402E	402F	4030
E	4031	4032	4033	4034	4035	4036	4037	4038	4039	403A	403B	403C
F	403D	403E	403F	4040	4041	4042	4043	4044	4045	4046	4047	4048
G	4049	404A	404B	404C	404D	404E	404F	4050	4051	4052	4053	4054
H	4055	4056	4057	4058	4059	405A	405B	405C	405D	405E	405F	4060

Well location / error code for 384 well plate. Add 40 to the code in the box. If code in the box is > FF, add 4 to the code:

	1	2	3	4	5	6	7	8	9	10	11	12	13	14	15	16	17	18	19	20	21	22	23	24
A	01	02	03	04	05	06	07	08	09	0A	0B	0C	0D	0E	0F	10	11	12	13	14	15	16	17	18
B	19	1A	1B	1C	1D	1E	1F	20	21	22	23	24	25	26	27	28	29	2A	2B	2C	2D	2E	2F	30
C	31	32	33	34	35	36	37	38	39	3A	3B	3C	3D	3E	3F	40	41	42	43	44	45	46	47	48
D	49	4A	4B	4C	4D	4E	4F	50	51	52	53	54	55	56	57	58	59	5A	5B	5C	5D	5E	5F	60
E	61	62	63	64	65	66	67	68	69	6A	6B	6C	6D	6E	6F	70	71	72	73	74	75	76	77	78
F	79	7A	7B	7C	7D	7E	7F	80	81	82	83	84	85	86	87	88	89	8A	8B	8C	8D	8E	8F	90
G	91	92	93	94	95	96	97	98	99	9A	9B	9C	9D	9E	9F	A0	A1	A2	A3	A4	A5	A6	A7	A8
H	A9	AA	AB	AC	AD	AE	AF	B0	B1	B2	B3	B4	B5	B6	B7	B8	B9	BA	BB	BC	BD	BE	BF	C0
I	C1	C2	C3	C4	C5	C6	C7	C8	C9	CA	CB	CC	CD	CE	CF	D0	D1	D2	D3	D4	D5	D6	D7	D8
J	D9	DA	DB	DC	DD	DE	DF	E0	E1	E2	E3	E4	E5	E6	E7	E8	E9	EA	EB	EC	ED	EE	EF	F0
K	F1	F2	F3	F4	F5	F6	F7	F8	F9	FA	FB	FC	FD	FE	FF	100	101	102	103	104	105	106	107	108
I	109	10A	10B	10C	10D	10E	10F	110	111	112	113	114	115	116	117	118	119	11A	11B	11C	11D	11E	11F	120
M	121	122	123	124	125	126	127	128	129	12A	12B	12C	12D	12E	12F	130	131	132	133	134	135	136	137	138
N	139	13A	13B	13C	13D	13E	13F	140	141	142	143	144	145	146	147	148	149	14A	14B	14C	14D	14E	14F	150
O	151	152	153	154	155	156	157	158	159	15A	15B	15C	15D	15E	15F	160	161	162	163	164	165	166	167	168
P	169	16A	16B	16C	16D	16E	16F	170	171	172	173	174	175	176	177	178	179	17A	17B	17C	17D	17E	17F	180

Status String Format

Following execution of each command, the Synergy sends a status string back to the computer. This string consists of 5 successive ASCII characters – a four-byte string representing a hexadecimal status code, and then ETX.

Fatal errors indicate a hardware failure require recycling of instrument power.

Fatal Errors

TCB NOT AVAIL ERR	"A100"	task control block not available
READ NOT AVAIL ERR	"A200"	read function already invoked
NOT AVAIL ERR	"A300"	<device> not available
CHECKSUM ERR	"A400"	failed code checksum test on powerup
POWER ERR	"A500"	power dropped below safe level
DFLASH TIMEOUT ERR	"A600"	data flash write timed out
DFLASH ERR	"A700"	read didn't match write {test}<chip>
CFLASH TIMEOUT ERR	"A800"	code flash write timed out
HEAP CORRUPTED ERR	"A900"	memory allocation heap corrupted

Non-Fatal Errors

ABORT ERR	"0100"	read function aborted
NO SENSOR ERR	"0200"	<motor> didn't find opto-sensor transition
NO BEAM ERR	"0300"	<motor> didn't find saturation transition
MOTOR VERIFY ERR	"0400"	<motor> failed positional verify
SATURATION ERR	"0500"	A/D signal saturated <filter><channel>
FILTER GAIN ERR	"0600"	<filter> gain out of range
NOISE TEST ERR	"0700"	reader {channel} failed noise test
OFFSET TEST ERR	"0800"	reader {channel} failed offset test
DARK RANGE ERR	"0900"	read-time {channel}<filter> dark out of range
AIR RANGE ERR	"0A00"	read-time {channel}<filter> air/blank out
WAVECAL DATA ERR	"0D00"	wavelength calibration data missing
WAVE NOT FOUND ERR	"0E00"	wavelength not found in table <read filter>
FILTER SIGNAL ERR	"0F00"	{channel}<filter> signal out of range
CNFG DATA ERR	"1000"	necessary configuration data missing
CNFG CHECKSUM ERR	"1100"	failed configuration checksum test
AUTOCAL DATA ERR	"1200"	carrier calibration data missing
MOTOR NOT HOMED ERR	"1300"	<motor> not homed successfully
INCUBATOR FAILURE	"1500"	incubator failure {error code}<zone(s)>
SC ASSAY DEF ERR	"1600"	computer control assay definition error
KIN INTERVAL ERR	"1700"	interval too short for selected options
MALLOC ERR	"1900"	malloc failed
ATOD INIT ERR	"1C00"	A/D calib STBY transition not detected
OVERLAP ERR	"1F00"	bandpass overlap in filterset
INVALID PARAM ERR	"2100"	invalid parameter value selected
PMT ERR	"2200"	PMT test signal out of range <test type>
SENSOR POS ERR	"2400"	<motor> failed verify at test sensor

Non-Fatal Errors (Continued)

FLASH MISS ERR	"2500"	<motor> went by flash location too soon
XY LIMIT ERR	"2600"	physical limit exceeded for area scan request
MOTOR IN USE ERR	"2800"	<motor> currently in use
VREF ERR	"2900"	voltage reference failed <test type>
PLATE JAM ERR	"2A00"	<motor> didn't see middle sensor
SYRINGE ERR	"2B00"	syringe error <syringe test code>
DISP CNFG DATA ERR	"2C00"	dispenser data error <disp cnfg test code>
DISPREAD ERR	"2D00"	dispense/read error <disp/read param test>
PROBE Z CAL ERR	"2E00"	probe Z calibration failure <cal code>
SPOOL TIMEOUT ERR	"2F00"	no ACK received for data handshaking
EX BLOCK ERR	"3000"	wrong block in excitation slot <TR block in>
KINETIC OVERRUN ERR	"3100"	plate read took longer than kinetic interval
ATOD ERR	"3200"	<device> never saw A/D ready transition
DOOR LOCK ERR	"3300"	<motor> required carrier outside when locked in
PMT WELL ERR	"4000"	overload at <well> ('A01'..'P24')

Test Type Codes <lowest digit in returned error code>

FAIL VTEST HI	"1"	higher PMT voltage level incorrect
FAIL VTEST LO	"2"	lower PMT voltage level incorrect
FAIL WELL TEST	"5"	PMT saturation at well
FAIL BKGRND TEST	"8"	PMT saturation during background overload test

Vref Test Channel Codes <lowest digit in returned error code>

TEST LAMP	"1"	lamp current test
TEST 24V	"2"	24V power drive test
TEST MOTOR	"3"	motor drive test
TEST XF MIN	"4"	xenon flash min power test
TEST XF LOW	"5"	xenon flash low power test
TEST XF HIGH	"6"	xenon flash high power test
TEST XF MAX	"7"	xenon flash max power test
TEST XF HTRF	"8"	xenon flash TR power test

Motor Codes <lowest digit in returned error code>

Carrier X-Axis	"0"
Carrier Y-Axis	"1"
Excitation Filter Wheel	"2"
Emission Filter Wheel	"3"
Monochromator Filter Wheel	"4"
Monochromator	"5"
Probe Height Axis	"6"
Probe Changer	"7"
Dispenser Syringe 1	"8"
Dispenser Syringe 2	"9"

Incubator Codes {second lowest digit in returned error code}

Range Error	"0"
Thermistor Error	"1"
A/D Error	"2"

Note: Affected zones are encoded in the lowest digit returned – one bit per zone, starting from bit 0.

Data Flash Codes {second lowest digit in returned error code}

Readback Error	"0"	data readback didn't match data written
Copy Error	"1"	final data readback didn't match original passed in

A/D Device Codes <lowest digit in returned error code>

Absorbance measurement	"1"
Fluorescence measurement	"2"
Incubation measurement	"3"
Voltage reference	'4"

A/D Device Codes <second-lowest digit in returned error code>

A/D ready line	"0"	A/D converter never saw ready line transition
A/D noise "3200"	"1"	A/D samples inconsistent

Probe Z Calibration Codes <lowest digit in returned error code>

Jig Windup	"2"	not enough windup at jig

Syringe Motor Error Test Codes <lowest digit in returned error code>

OFF SENSOR	"1"	syringe off sensor when it should be on
ON SENSOR	"2"	syringe on sensor when it should be off
SENSOR CLEAR COUNT	"3"	sensor clear count out of range
FMEA TEST FAIL	"4"	clear count measured during aspirate operation deviated more than allowed range from initial value
MOVE OVERRANGE	"5"	number of microsteps requested for move too large
SYR NOT HOME	"6"	syringe logical position not at home
INVALID POSITION	"7"	invalid position passed to position syringe function
INVALID OPERATION	"8"	invalid syringe operation selected
INVALID PROFILE	"9"	motor profile selected has too many steps for move
NO CATCH PLATE	"A"	catch plate not in carrier for prime or purge

Dispenser Configuration Data Error Test Codes (lowest digit in returned error code)

DATA NOT SET	"1"	disp cnfg data not set
CHKSUM FAILED	"2"	disp cnfg data checksum failed
ULPERSTEP OUT OF RANGE	"3"	syringe µl/step factor not within allowed limits
INJECTOR POSITION ERR	"4"	invalid injector position or position not set
VOLUME CAL DATA ERR	"5"	volume cal data is invalid
PULLBACK VOLUME ERR	"6"	pull back volume too large
DEFAULT VOL CAL DATA SET	"7"	indicates that default cal volume data set and should be updated via the serial host with the cal data values from the attached syringe drive
TWO BOTTOM INJECTORS	"8"	only one injector can be at bottom position

Dispense/Read Runtime/Definition Error Test Codes (lowest two digits in returned error code)

SAMPLE START LATE	"0"	individual sample missed its scheduled start time
FILTERSETS OUT OF RANGE	"01"	more than two filters selected for disp/read method
FILTER SWITCHING OVERLAP	"02"	filter bandpass overlap condition exists in the intermediate switching position for multi filterset reads.
FILTERS NOT ADJACENT	"03"	ex or em filters not adjacent for multi filterset reads
EX FILTER PLUG POSITION	"04"	filter plug(s) not positioned next to ex filter(s) for light shutter feature
INVALID MODE	"05"	invalid processing mode received
DISP READ DEF NOT SET	"06"	dispense/read protocol parameters not set or not valid
FEATURE NOT AVAILABLE	"07"	disp/read feature not enabled by dip switch
INVALID EX WAVE	"08"	excitation wavelengths must be the same for TR assay
TIP PRIME TUB VOL capacity	"09"	total tip prime vols in assay larger than tub
NUM EVENTS	"0B"	total number of events defined invalid
INVALID EVENT	"C"	invalid event type received
INVALID GEOMETRY	"0D"	wells spaced too close for dispense operation
PLATE START LATE	"0E"	plate mode event missed its scheduled start time
INVALID TIP PRIME	"0F"	tip prime conflicts with tip prime rules
NUM READ EVENTS	"10"	number of read events defined invalid
READ START TIME	"11"	read event start time out of range
NUM SAMPLES	"12"	number of samples out of range
SAMPLING INTERVAL	"13"	sampling interval out of range
NUM PLATE READS	"14"	number of plate mode kinetic reads out of range
PLATE MODE READ TIME	"15"	plate mode kinetic interval time too short
READ START LATE	"16"	read event missed its scheduled start time
NUM DISP EVENTS	"21"	number of dispense events defined invalid
TIP PRIME VOLUME	"22"	tip prime volume out of range
DISP VOLUME	"23"	volume requested out of range
DISP RATE	"24"	dispense rate requested out of range
DISP START TIME	"25"	dispense start time/kinetic interval out of range
DISP INTERVAL	"26"	dispense kinetic interval out of range
DISPENSER NOT ATTACHED	"28"	dispenser module not attached
DISPENSER NOT INITIALIZED	"29"	dispenser has not been initialized
DISPENSER NOT PRIMED	"2A"	dispenser has not been primed
INVALID DISPENSER OPERATION	"2B"	invalid dispenser operation type requested
DISP START LATE	"2C"	dispense event missed its scheduled start time
NUM SHAKE EVENTS	"30"	number of shake events defined invalid
SHAKE START TIME	"31"	shake start time out of range
READ EVENT EXPECTED	"32"	read event must follow shake event with repeat
SHAKE TIME	"33"	shake time out of range

Dispense/Read Runtime/Definition Error Test Codes (Continued)

SHAKE SPEED	"34"	shake speed out of range
INVALID DEF FORMAT	"40"	definition format obsolete
INVALID_RETURN_TIME	"41"	event start/completion time over returnable limit

Well Number Codes <lowest three digits in returned error code>

The row and column of the offending well can be extracted from the well code by applying the following formula (examples use 8 x 12, 96-well plate):

1. Convert the ASCII hex string to a decimal equivalent. Ex: "057" indicates 57 hex, yielding a well code of 87 decimal.
2. Row = (well code) / (columns in plate), rounded up to a whole number.
   Ex: 87/12 = 7.25, indicating row 8 (or H).
3. Column = (well code) - ((row-1) * (columns in plate)).
   Ex: 87 - ((8 - 1) * 12) = column 3.

Note: If this code is returned in response to a Run Area Scan ('c') command, it indicates the scanned point (left-to-right) that caused the error.

Appendix D

Specifications

This appendix contains BioTek's published specifications for the Synergy™ HT.

Specifications 208
Microplates.....208
Hardware and Environmental 208
Absorbance 209
Fluorescence 211
Incubation.....213
Shake.....213
Injector Model 213

Specifications

Microplates

All models accommodate standard 6-, 12-, 24-, 48-, 96- and 384-well microplates with 128 x 86 mm geometry, and support:

- **Absorbance mode:** plates up to 0.8″ (20.30 mm) high
- **Fluorescence/Luminescence modes:** plates up to 1.25″ (31.75 mm) high
- **PCR tube trays** up to 1.25″ (31.75 mm) high (may require an adapter)

All models read 6-, 12-, 24-, 48-, 96- and 384-well microplates

Injector models dispense to 6-, 12-, 24-, 48-, and 96-well microplates

Hardware and Environmental

Light Source:	**Absorbance** Xe flash light source 10 W max average power Life: 1 billion flashes **Fluorescence** Tungsten quartz halogen 20 W Life: 1000 hours
Dimensions:	16″ D x 15″ W x 10″ H (40.6 cm x 38 cm x 25.4 cm)
Weight:	38 lb. (17 kg)
Environment:	Operational temperature 18° to 40°C
Humidity:	10% to 85% relative humidity (non-condensing)
Power Consumption:	100 VA max, 130 VA max with injectors

Absorbance

Accuracy, Linearity, Repeatability

All qualifications were conducted using 96-/384-well, flat bottom microplates.

Measurement Range: 0.000 to 4.000 OD

All qualifications were conducted with 96- and 384-well flat-bottom plates.

Accuracy:

0.000 to 2.000 OD ± 1.0% ± 0.010 OD Normal and Rapid modes, 96-well plates
0.000 to 2.000 OD ± 2.0% ± 0.010 OD Normal and Rapid modes, 384-well plates
2.000 to 2.500 OD ± 3.0% ± 0.010 OD Normal and Rapid modes, 96- and 384-well plates
2.500 to 3.000 OD ± 3.0% ± 0.010 OD Normal mode, 96-well plates
0.000 to 1.000 OD ± 1.0% ± 0.010 OD Sweep mode, 96- and 384-well plates

Linearity:

0.000 to 2.000 OD ± 1.0% Normal and Rapid modes, 96-well plates
0.000 to 2.000 OD ± 2.0% Normal and Rapid modes, 384-well plates
2.000 to 2.500 OD ± 3.0% Normal and Rapid modes, 96- and 384-well plates
2.500 to 3.000 OD ± 3.0% Normal mode, 96-well plates
0.000 to 1.000 OD ± 1.0% Sweep mode, 96- and 384-well plates

Repeatability:

0.000 to 2.000 OD ± 1.0% ± 0.005 OD Normal and Rapid modes, 96- and 384-well plates
2.000 to 2.500 OD ± 3.0% ± 0.005 OD Normal and Rapid modes, 96- and 384-well plates
2.500 to 3.000 OD ± 3.0% ± 0.005 OD Normal mode, 96- and 384-well plates
0.000 to 1.000 OD ± 2.0% ± 0.010 OD Sweep mode, 96- and 384-well plates
For the above performance, the Gain on the Optics Test should be below 10.0.

Optics

λ range:	200 to 999 nm
λ accuracy:	± 2 nm
λ repeatability:	± 0.2 nm
λ bandpass:	2.4 nm
Detector:	Photodiodes (2)

Read Modes

The Synergy™ HT supports the following read modes:

- **Normal** mode is the slowest of the three available modes. After positioning the well over the probe, the instrument waits 100 milliseconds before taking the measurement (8-flash data collection).

❖ **Note:** The 100 ms delay is to allow for more complete fluid settling. If the OD is > 2.000, the reader takes 64 more measurements (64-flash data collection).

- **Rapid** mode is faster than Normal mode because the instrument does not wait before taking the measurement, and performs an 8-flash data collection even for ODs > 2.000.
- **Sweep** mode is the fastest of the three available modes. The plate carrier sweeps each row past the optics channel without stopping, collecting data with a single flash at each well as it goes by.

Read Timing

The following read times are based on a single- or dual-wavelength measurement. Actual reading times can vary, depending upon the wavelength, read mode, and other reading parameters selected. In Normal read mode (see above), the optical density of the solution affects timing as well.

Endpoint read time is from plate start to plate stop. Kinetic read time is from A1 to A1 read positions.

Endpoint, 96-well plate:	**Single 630 nm**	**Dual 630/450 nm**
Normal Read Mode	57 sec	106 sec
Rapid Read Mode	47 sec	86 sec
Sweep Read Mode	23 sec	37 sec

Endpoint, 384-well plate:	**Single 630 nm**	**Dual 630/450 nm**
Normal Read Mode	159 sec	309 sec
Rapid Read Mode	121 sec	232 sec
Sweep Read Mode	38 sec	65 sec

Kinetic, 96-well plate:	**Single 630 nm**
Normal Read Mode	49 sec
Rapid Read Mode	39 sec
Sweep Read Mode	14 sec

Kinetic, 384-well plate:	**Single 630 nm**
Normal Read Mode	150 sec
Rapid Read Mode	111 sec
Sweep Read Mode	26 sec

Fluorescence

Read Timing

Because of the possible wide variations in setup, the following benchmark conditions are specified:

Excitation Filter:	485/20 nm
Emission Filter:	528/20 nm
Samples per well:	10
Delay before sampling:	350 ms
Delay between samples:	1 ms
96-well read:	89 sec
384-well read:	275 sec

Optical Probes

The Synergy HT is configured with a variety of probe sizes: 1.5 and 3 mm probes can be installed in either the top or bottom positions; the 5 mm probe can only be installed in the bottom position.

Sensitivity

5 mm probe:

Sodium Fluorescein (SF) (Bottom reading):

10 pg/ml solution of Sodium Fluorescein in PBS
150 µL per well signal-to-noise ratio greater than 2.0
Excitation 485/20, Emission 530/25
Hellma 96-well quartz plate

Propidium Iodide (PI) (Bottom reading):

62.5 ng/ml solution of Propidium Iodide in PBS
50 µL per well signal-to-noise ratio greater than 2.0
Excitation 485/20, Emission 645/40
Corning Costar® 96-well, black-sided, clear bottom plate

3 mm probe:

Sodium Fluorescein (SF) (Bottom reading):

20 pg/ml solution of Sodium Fluorescein in PBS
150 µL per well signal-to-noise ratio greater than 2.0
Excitation 485/20, Emission 530/25
Hellma 96 well quartz plate

Propidium Iodide (PI) (Bottom reading):

125 ng/ml solution of Propidium Iodide in PBS
50 µL per well signal-to-noise ratio greater than 2.0
Excitation 485/20, Emission 645/40
Corning Costar® 96-well, black-sided, clear bottom plate

Methylumbelliferone (MUB) (Top reading):

0.16 ng/ml solution of Methylumbelliferone in CBB
300 µL per well signal-to-noise ratio greater than 2.0
Excitation 360/40, Emission 460/40
Corning Costar® black strips

1.5 mm probe:

Sodium Fluorescein (SF) (Bottom reading):

40 pg/ml solution of Sodium Fluorescein in PBS
150 µL per well signal-to-noise ratio greater than 2.0
Excitation 485/20, Emission 530/25
Hellma 96-well quartz plate

Propidium Iodide (PI) (Bottom reading):

250 ng/ml solution of Propidium Iodide in PBS
50 µL per well signal-to-noise ratio greater than 2.0
Excitation 485/20, Emission 645/40
Corning Costar® 96-well, black-sided, clear bottom plate

Methylumbelliferone (MUB) (Top reading):

0.31 ng/ml solution of Methylumbelliferone in CBB
300 µL per well signal-to-noise ratio greater than 2.0
Excitation 360/40, Emission 460/40
Corning Costar® black strips

Optional Time-Resolved Fluorescence

- Delay 0 or 20 µs to 16000 µs
- Integration interval 20 to 16000 µs
- Times adjustable in 10 µs increments

Incubation

- Temperature control range from 4º over ambient to 50ºC
- Temperature variation ± 0.50°C across the plate @ 37°C (250 µL per well with the plate sealed)

Shake

- Low, Medium, High and Variable shaking speeds
- Shake duration is programmable by the user

Injector Model

The following specifications apply to Synergy™ HT models with injectors:

Plate Type:	Dispenses to standard 6-, 12-, 24-, 48-, and 96-well microplates with 128 x 86 mm geometry
Dispense Volume Range:	5-1000 µL with a 5-20 µL tip prime
Accuracy:	Dispensing deionized water with 0.1% Tween® 20 at room temperature: ± 1 µL at 5-50 µL ± 2% at 51-1000 µL
Precision:	Dispensing a 200 µL solution of deionized water, 0.1% Tween 20, and dye at room temperature: ≤ 2.0% for volumes of 50-200 µL ≤ 4.0% for volumes of 25-49 µL ≤ 7.0% for volumes of 10-24 µL ≤ 10.0% for volumes of 5-9 µL

Appendix E

Instrument Dimensions for Robotic Interface

Figure 40 shows the location of the microplate carrier in reference to the exterior surfaces of the Synergy™ HT and the mounting holes on the bottom. The illustration should facilitate system setup with a robotic instrument, such as the BioStack™ Microplate Stacker.

Instrument Dimensions for Robotic Interface

If you have purchased the BioStack™ to operate with the Synergy™ HT, special alignment hardware is included in the BioStack alignment kit for correct positioning of the Synergy HT with the BioStack. Refer to the ***Installation*** chapter in the BioStack Operator's Manual for instructions.

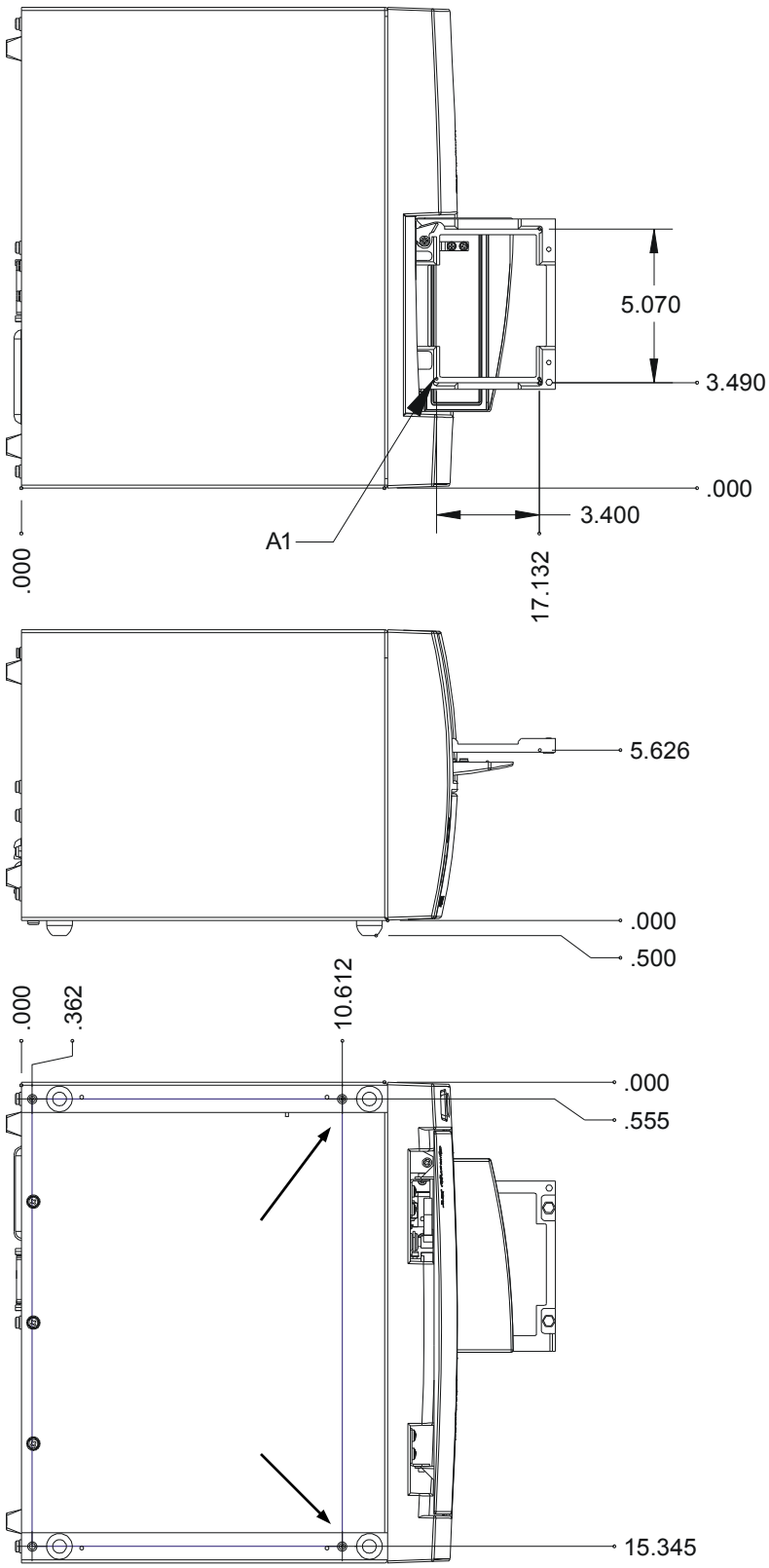

The two arrows point to special mounting holes for alignment caps for operation with the BioStack.

Figure 40: Instrument dimensions, mounting holes, and carrier position